Compal Confidential

Schematics Document

AUBURNDALE/CLARKSFIELD with Intel IBEX PEAK-M core logic

Versace

2009-07-24

REV:0.4

機密 等級 硬體二部 產品人員 產品日期 解密日期

Security Classification	Compal Secret Data		
Issued Date	2008/09/15	Deciphered Date	2009/09/15

THIS SHEET OF ENGINEERING DRAWING IS THE PROPRIETARY PROPERTY OF COMPAL ELECTRONICS, INC. AND CONTAINS CONFIDENTIAL AND TRADE SECRET INFORMATION. THIS SHEET MAY NOT BE TRANSFERRED FROM THE CUSTODY OF THE COMPETENT DIVISION OF R&D DEPARTMENT EXCEPT AS AUTHORIZED BY COMPAL ELECTRONICS, INC. NEITHER THIS SHEET NOR THE INFORMATION IT CONTAINS MAY BE USED BY OR DISCLOSED TO ANY THIRD PARTY WITHOUT PRIOR WRITTEN CONSENT OF COMPAL ELECTRONICS, INC.

Compal Electronics, Inc.

Title: *Cover Sheet*

Size: Custom | Document Number: *LA-4951P* | Rev: 0.4

Date: Tuesday, July 28, 2009 | Sheet 1 of 48

Compal Confidential
File Name : Versace

Versace

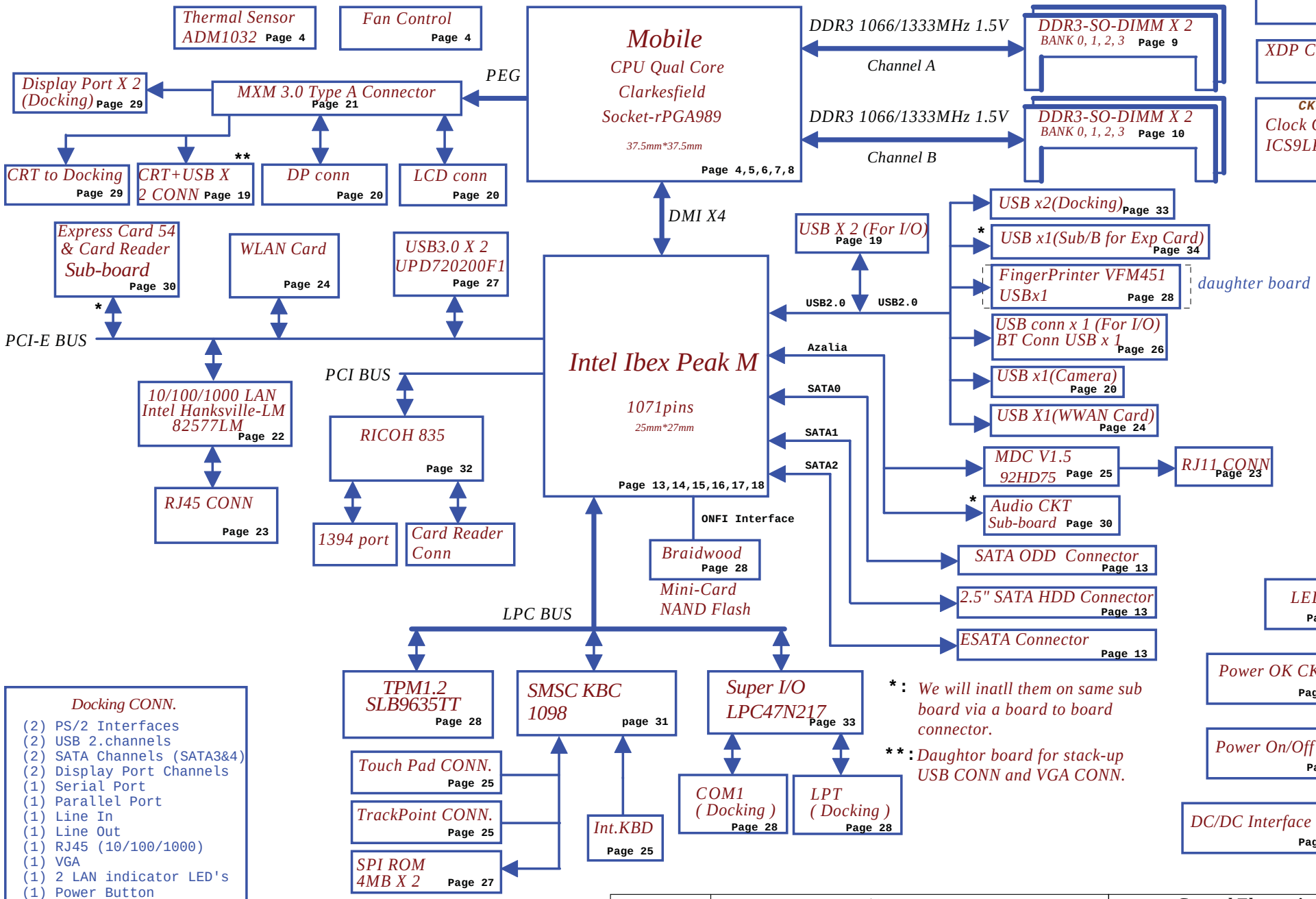

Docking CONN.

(2) PS/2 Interfaces
(2) USB 2.channels
(2) SATA Channels (SATA3&4)
(2) Display Port Channels
(1) Serial Port
(1) Parallel Port
(1) Line In
(1) Line Out
(1) RJ45 (10/100/1000)
(1) VGA
(1) 2 LAN indicator LED's
(1) Power Button
(1) I2C interface

Page. 27

Security Classification	Compal Secret Data		
Issued Date	2008/09/15	Deciphered Date	2009/09/15

THIS SHEET OF ENGINEERING DRAWING IS THE PROPRIETARY PROPERTY OF COMPAL ELECTRONICS, INC. AND CONTAINS CONFIDENTIAL AND TRADE SECRET INFORMATION. THIS SHEET MAY NOT BE TRANSFERED FROM THE CUSTODY OF THE COMPETENT DIVISION OF R&D DEPARTMENT EXCEPT AS AUTHORIZED BY COMPAL ELECTRONICS, INC. NEITHER THIS SHEET NOR THE INFORMATION IT CONTAINS MAY BE USED BY OR DISCLOSED TO ANY THIRD PARTY WITHOUT PRIOR WRITTEN CONSENT OF COMPAL ELECTRONICS, INC.

Compal Electronics, Inc.

Title: Block Diagram

Size: Custom | Document Number: LA-4951P | Rev: 0.4

Date: Tuesday, July 28, 2009 | Sheet 2 of 48

Voltage Rails

(O MEANS ON X MEANS OFF)

power plane / State	+RTCVCC	+B +3VL	+5VALW +3VALW	+1.5V +0.75V	+5VS +3VS +1.5VS +NVVDD +VCCP +CPU_CORE +1.05VS +1.8VS
S0	O	O	O	O	O
S1	O	O	O	O	O
S3	O	O	O	O	X
S5 S4/AC	O	O	O	X	X
S5 S4/ Battery only	O	O	X	X	X
S5 S4/AC & Battery don't exist	O	X	X	X	X

SMBUS Control Table

	SOURCE	BATT	XDP	SODIMM	CLK CHIP	MINI CARD	DOCK	NIC	THERMAL SENSOR	G-SENSOR
SMB_EC_CK1 SMB_EC_DA1	SMSC1098	V	X	X	X	X	X	X	X	X
SMBCLK SMBDATA	Calpella	X	V	V	V	V	V	X	X	X
SML0CLK SML0DATA	Calpella	X	X	X	X	X	X	V	X	X
SML1CLK SML1DATA	Calpella	X	X	X	X	X	X	X	V	V

Symbol Note :

: means Digital Ground

: means Analog Ground

Install below 43 level BOM structure for ver. 0.1

DEBUG@ : means just build when PCIE port 80 CARD function enable. *Remove before MP*

M92@ : Install for M92 Graphic controller

8072@ : Install for 8072 NIC controller

1098@ : Install for 1098 KBC controller

CK32@ : Install for 32 pin CLOCK GEN

Install below 45 level BOM structure for ver. 0.1

45@ : means just put it in the BOM of 45 level.

Reserve below BOM structure for ver. 0.1

@ : means just reserve , no build

CONN@ : means ME part.

M93@ : Install for M93 Graphic controller

8075@ : Install for 8075 NIC controller

1091@ : Install for 1091 KBC controller

CK72@ : Install for 72 pin CLOCK GEN

Thermal Sensor EMC2113 with CPU PWM FAN

Layout note:
1. Place C1 & C408 close to U1 pin.
2. Place U1 close to JCFAN1.

Change R5 to 22ohm from 68ohm. 11/30

Add C408. 11/30

Change R10 to 6.8K to setup Q1 E-diode1. 12/04

U1 EMC2113-2-AX_QFN16_4X4

Add PD R211 for FAN_PWM. 11/30

Install R133. 7/14

Q24 2N7002_SOT23-3

Change Q24.2 connect from +3VS to PWR_GD. 12/11

REMOTE thermal sensor

Layout note:
1. Place Q1 close to bottom DDR DIMM.

Q1 MMBT3904W_SOT323-3

Layout Note:
place near the hottest spot area for NB & top SODIMM.

Layout rule : 10mil width trace length < 0.5", spacing 20mil

JCPU1B

Removed RP1 & RP3 connect to U3. 10/27

Intel doc 395136:
Remove R6 & R7 connect to GND directly. 11/06

Place close to JCPU1.

Follow DIOR's design. 2/20

Place close to JCPU1.

Intel S3

Change from +1.5V. 7/8

Change R33, R34 value. 7/10

Intel S3

FAN Connector

Remove D29 to prevent FAN fully turn issue. 7/2

No install R41. 7/14

JCFAN1 CONN@ ACES_50273-0040N-001

XDP Connector

JXDP1 SAMTE_BSH-030-01-L-D-A CONN@

Swap. 02/25

Disconnect from SMB_DATA/CLK_S3. 0206

Remove R37, R38, R39. 2/17

2/20.
Delete R44, R46, R52, R53, R50 and short XDP_TDI_M to XDP_TDO_M (pins AR29 and AP29 of JCPU1) like DIOR

Security Classification	Compal Secret Data		
Issued Date	2008/09/15	Deciphered Date	2009/09/15

THIS SHEET OF ENGINEERING DRAWING IS THE PROPRIETARY PROPERTY OF COMPAL ELECTRONICS, INC. AND CONTAINS CONFIDENTIAL AND TRADE SECRET INFORMATION. THIS SHEET MAY NOT BE TRANSFERED FROM THE CUSTODY OF THE COMPETENT DIVISION OF R&D DEPARTMENT EXCEPT AS AUTHORIZED BY COMPAL ELECTRONICS, INC. NEITHER THIS SHEET NOR THE INFORMATION IT CONTAINS MAY BE USED BY OR DISCLOSED TO ANY THIRD PARTY WITHOUT PRIOR WRITTEN CONSENT OF COMPAL ELECTRONICS, INC.

Compal Electronics, Inc.

Title: Clarksfield(1/5)-Thermal/XDP

Size: Custom | Document Number: LA-4951P | Rev: 0.4

Date: Tuesday, July 28, 2009 | Sheet 4 of 48

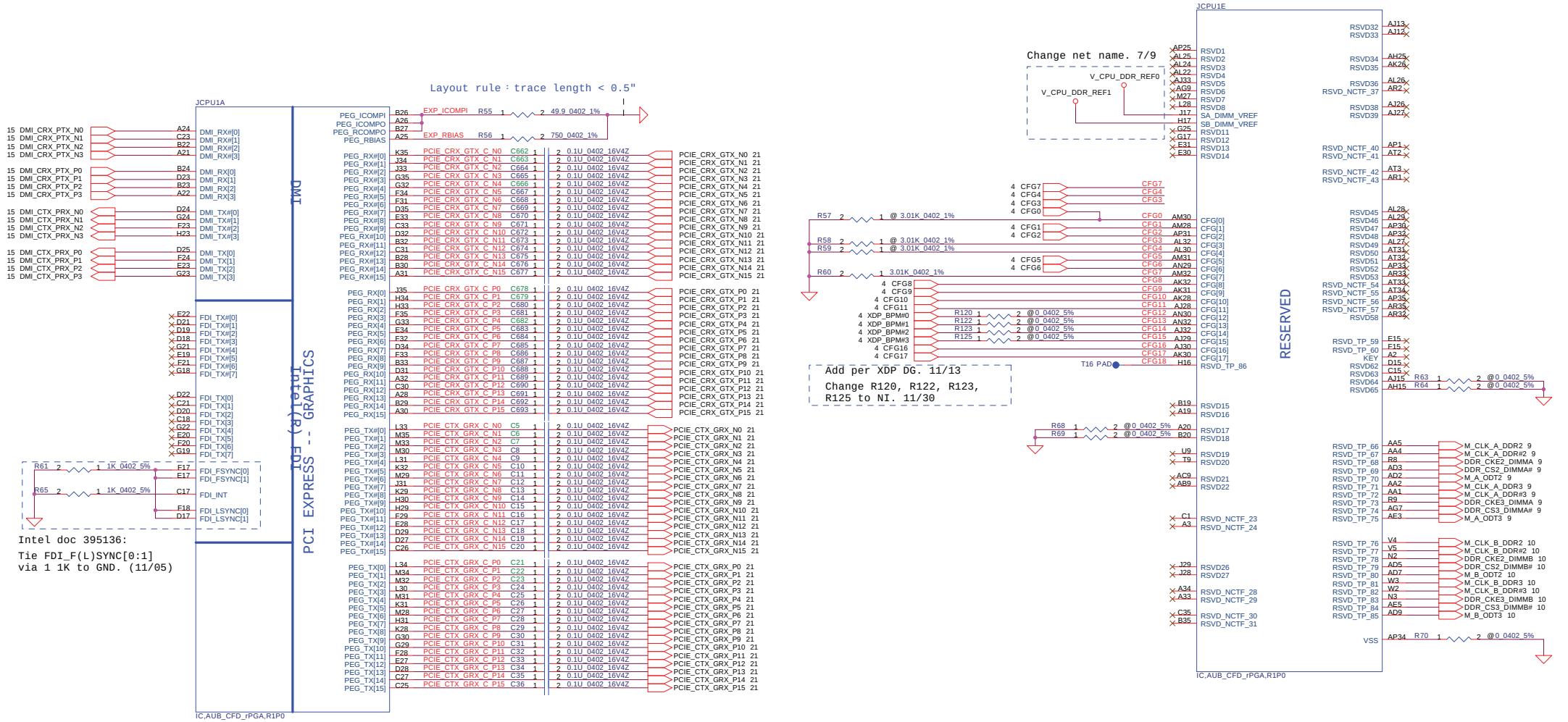

Security Classification	Compal Secret Data		
Issued Date	2008/09/15	Deciphered Date	2009/09/15

THIS SHEET OF ENGINEERING DRAWING IS THE PROPRIETARY PROPERTY OF COMPAL ELECTRONICS, INC. AND CONTAINS CONFIDENTIAL AND TRADE SECRET INFORMATION. THIS SHEET MAY NOT BE TRANSFERED FROM THE CUSTODY OF THE COMPETENT DIVISION OF R&D DEPARTMENT EXCEPT AS AUTHORIZED BY COMPAL ELECTRONICS, INC. NEITHER THIS SHEET NOR THE INFORMATION IT CONTAINS MAY BE USED BY OR DISCLOSED TO ANY THIRD PARTY WITHOUT PRIOR WRITTEN CONSENT OF COMPAL ELECTRONICS, INC.

Compal Electronics, Inc.

Title: **Clarksfield(2/5)-DMI/PEG/FDI**

Size	Document Number	Rev
Custom	LA-4951P	0.4

Date: Tuesday, July 28, 2009 | Sheet 5 of 48

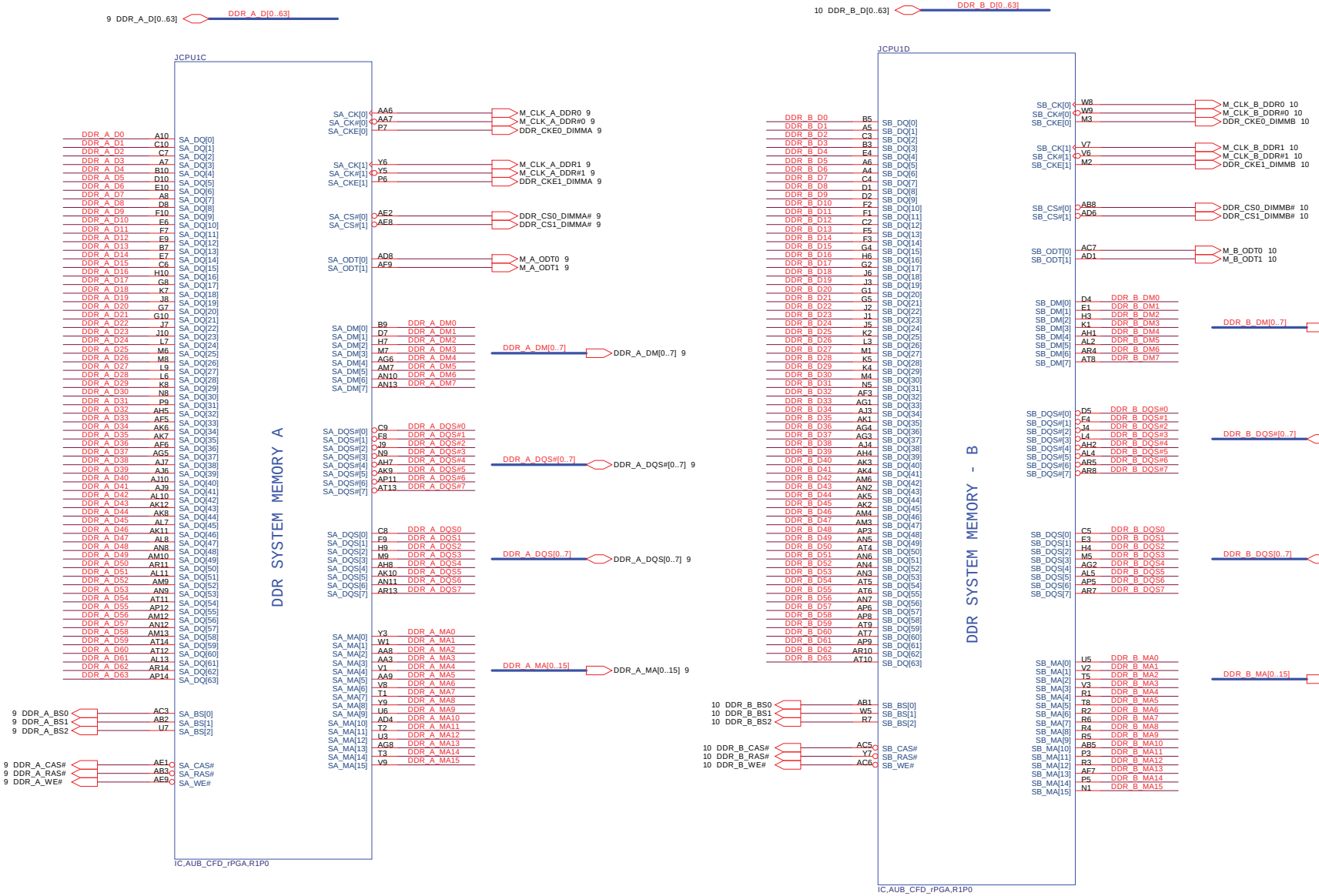

Security Classification	Compal Secret Data		
Issued Date	2008/09/15	Deciphered Date	2009/09/15

THIS SHEET OF ENGINEERING DRAWING IS THE PROPRIETARY PROPERTY OF COMPAL ELECTRONICS, INC. AND CONTAINS CONFIDENTIAL AND TRADE SECRET INFORMATION. THIS SHEET MAY NOT BE TRANSFERED FROM THE CUSTODY OF THE COMPETENT DIVISION OF R&D DEPARTMENT EXCEPT AS AUTHORIZED BY COMPAL ELECTRONICS, INC. NEITHER THIS SHEET NOR THE INFORMATION IT CONTAINS MAY BE USED BY OR DISCLOSED TO ANY THIRD PARTY WITHOUT PRIOR WRITTEN CONSENT OF COMPAL ELECTRONICS, INC.

Compal Electronics, Inc.

Title: **Clarksfield(2/6)-DDR3 A/B CH**

Size	Document Number	Rev
Custom	LA-4951P	0.4

Date: Tuesday, July 28, 2009 | Sheet 6 of 48

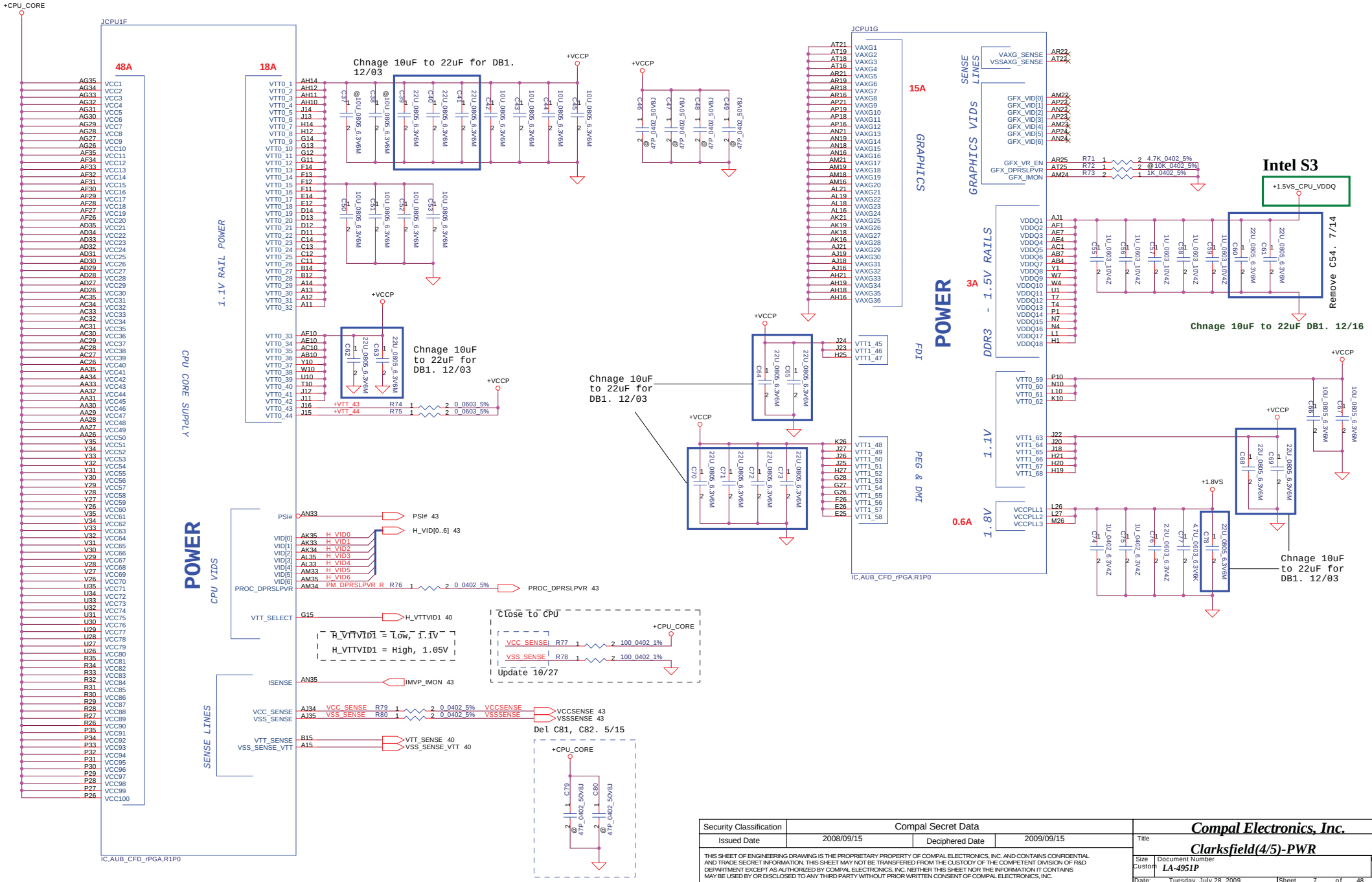

Security Classification	Compal Secret Data		
Issued Date	2008/09/15	Deciphered Date	2009/09/15

THIS SHEET OF ENGINEERING DRAWING IS THE PROPRIETARY PROPERTY OF COMPAL ELECTRONICS, INC. AND CONTAINS CONFIDENTIAL AND TRADE SECRET INFORMATION. THIS SHEET MAY NOT BE TRANSFERED FROM THE CUSTODY OF THE COMPETENT DIVISION OF R&D DEPARTMENT EXCEPT AS AUTHORIZED BY COMPAL ELECTRONICS, INC. NEITHER THIS SHEET NOR THE INFORMATION IT CONTAINS MAY BE USED BY OR DISCLOSED TO ANY THIRD PARTY WITHOUT PRIOR WRITTEN CONSENT OF COMPAL ELECTRONICS, INC.

Compal Electronics, Inc.

Title: **Clarksfield(4/5)-PWR**

Size	Document Number	Rev
Custom	LA-4951P	0.4

Date: Tuesday, July 28, 2009 | Sheet 7 of 48

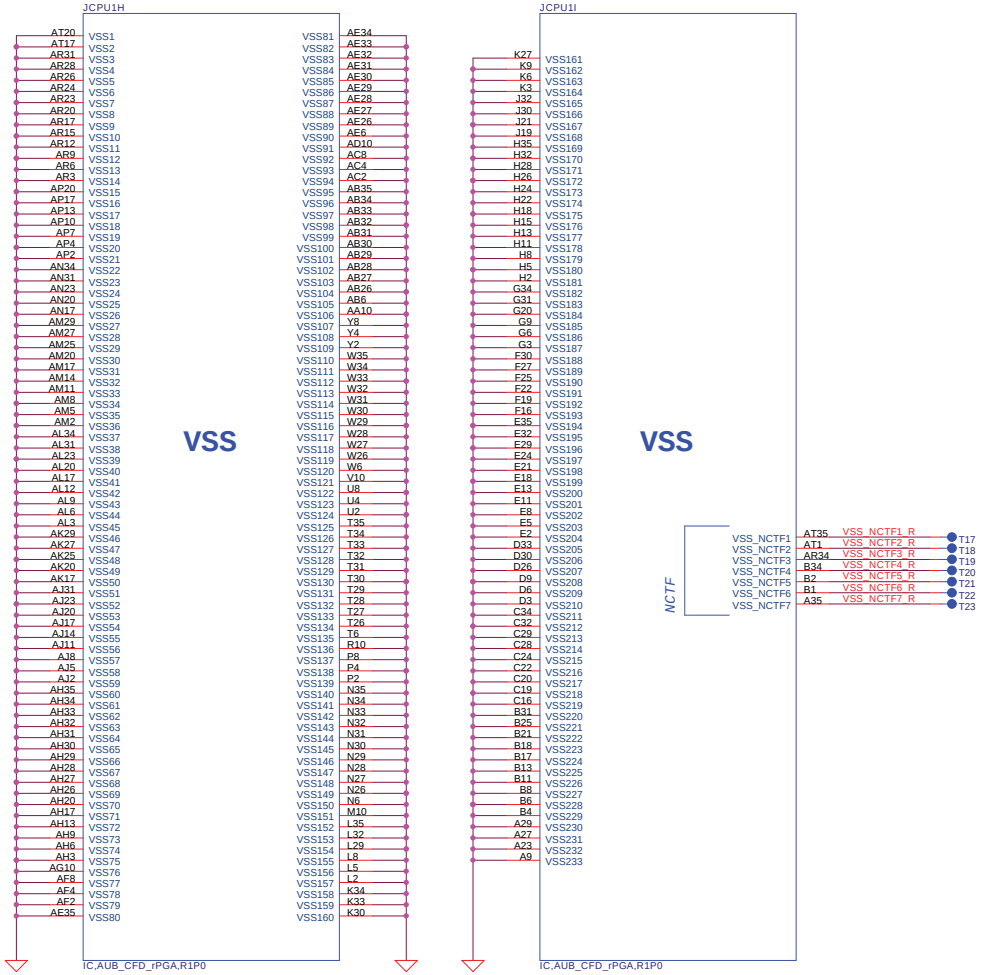

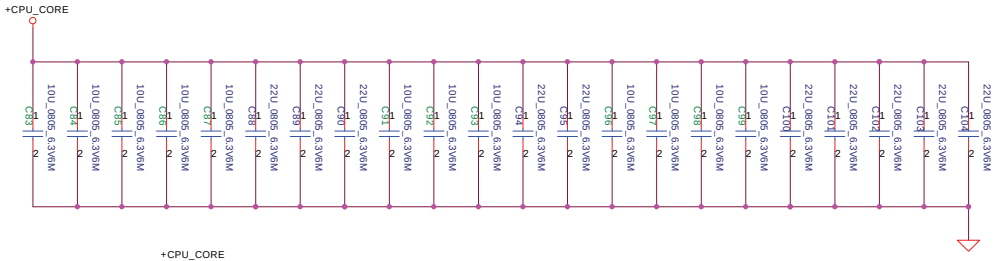

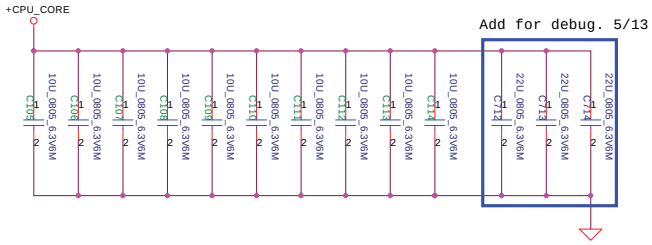

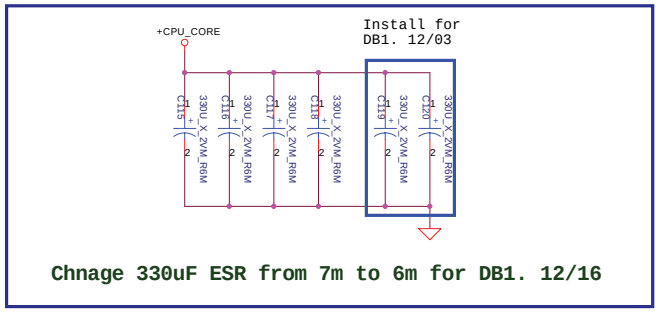

Security Classification	Compal Secret Data		
Issued Date	2008/09/15	Deciphered Date	2009/09/15

THIS SHEET OF ENGINEERING DRAWING IS THE PROPRIETARY PROPERTY OF COMPAL ELECTRONICS, INC. AND CONTAINS CONFIDENTIAL AND TRADE SECRET INFORMATION. THIS SHEET MAY NOT BE TRANSFERED FROM THE CUSTODY OF THE COMPETENT DIVISION OF R&D DEPARTMENT EXCEPT AS AUTHORIZED BY COMPAL ELECTRONICS, INC. NEITHER THIS SHEET NOR THE INFORMATION IT CONTAINS MAY BE USED BY OR DISCLOSED TO ANY THIRD PARTY WITHOUT PRIOR WRITTEN CONSENT OF COMPAL ELECTRONICS, INC.

Compal Electronics, Inc.

Title: **Clarksfield(5/5)-GND/Bypass**

Size: Custom | Document Number: LA-4951P | Rev: 0.4

Date: Tuesday, July 28, 2009 | Sheet 8 of 48

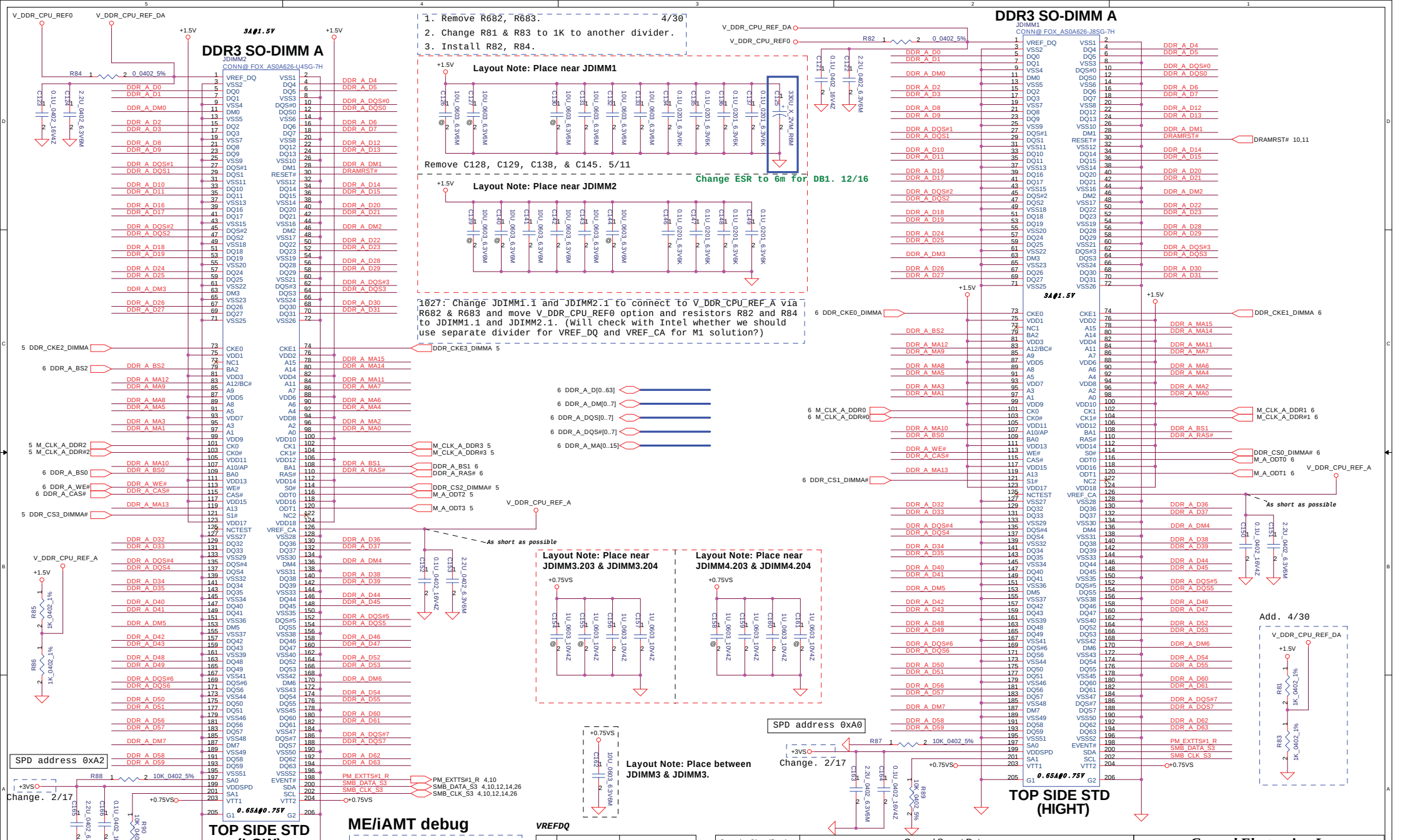
DDR3 SO-DIMM A
JDIMM2
CONN@ FOX_AS0A626-U4SG-7H
1. Remove R682, R683. 4/30
2. Change R81 & R83 to 1K to another divider.
3. Install R82, R84.
Layout Note: Place near JDIMM1
Remove C128, C129, C138, & C145. 5/11
Change ESR to 6m for DB1. 12/16
Layout Note: Place near JDIMM2
1027: Change JDIMM1.1 and JDIMM2.1 to connect to V_DDR_CPU_REF_A via R682 & R683 and move V_DDR_CPU_REF0 option and resistors R82 and R84 to JDIMM1.1 and JDIMM2.1. (Will check with Intel whether we should use separate divider for VREF_DQ and VREF_CA for M1 solution?)
DDR3 SO-DIMM A
JDIMM1
CONN@ FOX_AS0A626-J8SG-7H
Layout Note: Place near JDIMM3.203 & JDIMM3.204
Layout Note: Place near JDIMM4.203 & JDIMM4.204
Layout Note: Place between JDIMM3 & JDIMM3.
SPD address 0xA2
SPD address 0xA0
Change. 2/17
Add. 4/30
TOP SIDE STD (LOW)
TOP SIDE STD (HIGHT)
ME/iAMT debug
2/10
CONN@ ACES_85204-03001
VREFDQ
M1 V_DDR_CPU_REF_A R81, R83, R682, R683
M3 V_DDR_CPU_REF0 R82, R84
Security Classification Compal Secret Data
Issued Date 2008/09/15 Deciphered Date 2009/09/15
Compal Electronics, Inc.
DDRIII-SODIMM CHANNEL A
LA-4951P
Rev 0.4
Date: Tuesday, July 28, 2009 Sheet 9 of 48

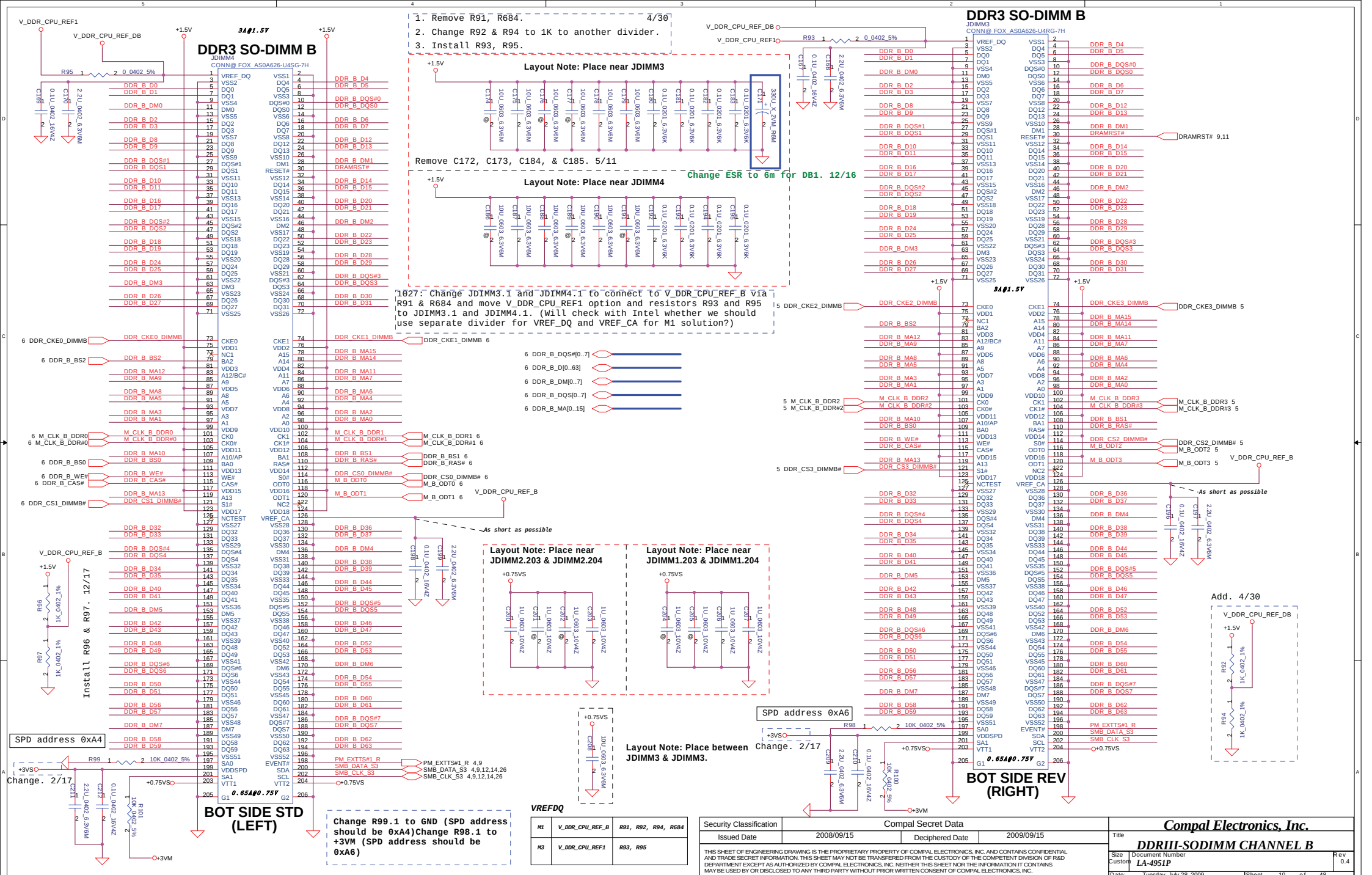
DDR3 SO-DIMM B
JDIMM4
CONN@ FOX_AS0A626-U4SG-7H
BOT SIDE STD (LEFT)
DDR3 SO-DIMM B
JDIMM3
CONN@ FOX_AS0A626-U4RG-7H
BOT SIDE REV (RIGHT)
1. Remove R91, R684. 4/30
2. Change R92 & R94 to 1K to another divider.
3. Install R93, R95.
Layout Note: Place near JDIMM3
Remove C172, C173, C184, & C185. 5/11
Change ESR to 6m for DB1. 12/16
Layout Note: Place near JDIMM4
1027: Change JDIMM3.1 and JDIMM4.1 to connect to V_DDR_CPU_REF_B via R91 & R684 and move V_DDR_CPU_REF1 option and resistors R93 and R95 to JDIMM3.1 and JDIMM4.1. (Will check with Intel whether we should use separate divider for VREF_DQ and VREF_CA for M1 solution?)
Layout Note: Place near JDIMM2.203 & JDIMM2.204
Layout Note: Place near JDIMM1.203 & JDIMM1.204
Layout Note: Place between JDIMM3 & JDIMM3.
Install R96 & R97. 12/17
SPD address 0xA4
SPD address 0xA6
Change. 2/17
Add. 4/30
As short as possible
Change R99.1 to GND (SPD address should be 0xA4)Change R98.1 to +3VM (SPD address should be 0xA6)
VREFDQ
M1 V_DDR_CPU_REF_B R91, R92, R94, R684
M3 V_DDR_CPU_REF1 R93, R95
Security Classification Compal Secret Data
Issued Date 2008/09/15 Deciphered Date 2009/09/15
Compal Electronics, Inc.
DDRIII-SODIMM CHANNEL B
Size Custom Document Number LA-4951P Rev 0.4
Date: Tuesday, July 28, 2009 Sheet 10 of 48

Intel S3

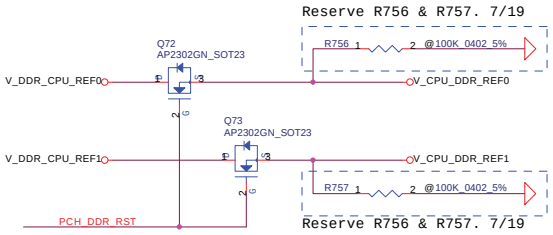

Remove Q77. 7/19

Remove R747. 7/20

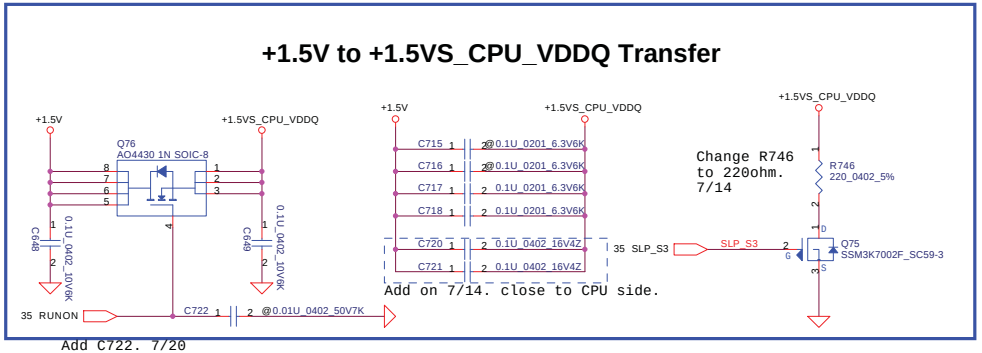

Add C722. 7/20

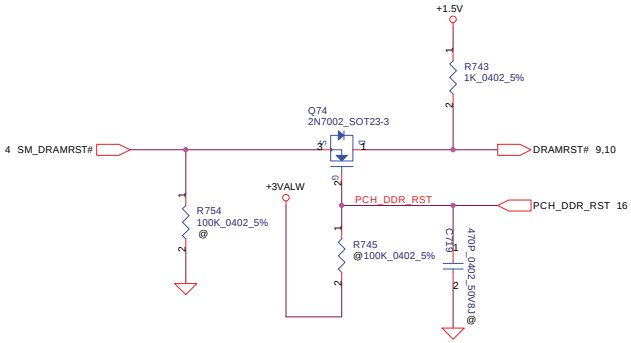

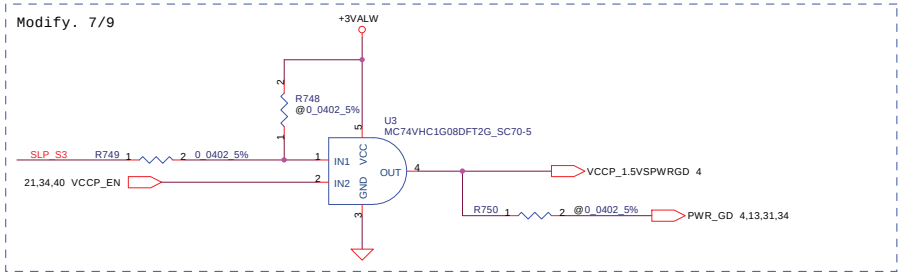

Security Classification	Compal Secret Data		
Issued Date	2008/09/15	Deciphered Date	2009/09/15

THIS SHEET OF ENGINEERING DRAWING IS THE PROPRIETARY PROPERTY OF COMPAL ELECTRONICS, INC. AND CONTAINS CONFIDENTIAL AND TRADE SECRET INFORMATION. THIS SHEET MAY NOT BE TRANSFERED FROM THE CUSTODY OF THE COMPETENT DIVISION OF R&D DEPARTMENT EXCEPT AS AUTHORIZED BY COMPAL ELECTRONICS, INC. NEITHER THIS SHEET NOR THE INFORMATION IT CONTAINS MAY BE USED BY OR DISCLOSED TO ANY THIRD PARTY WITHOUT PRIOR WRITTEN CONSENT OF COMPAL ELECTRONICS, INC.

Compal Electronics, Inc.

Title: *Intel S3 power saving*

Size: Custom | Document Number: *LA-4951P* | Rev: 0.4

Date: Tuesday, July 28, 2009 | Sheet 11 of 48

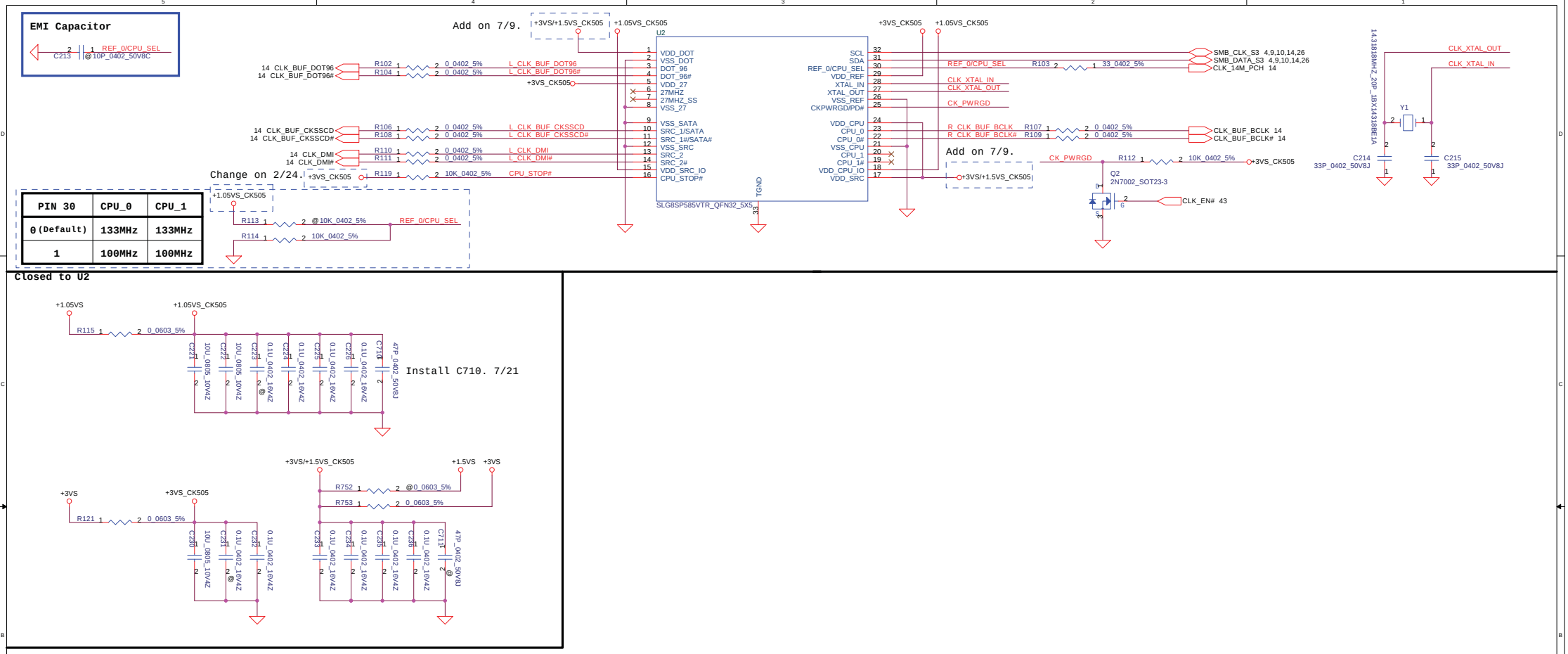

PIN 30	CPU_0	CPU_1
0 (Default)	133MHz	133MHz
1	100MHz	100MHz

Security Classification	Compal Secret Data		
Issued Date	2008/09/09	Deciphered Date	2009/09/09

THIS SHEET OF ENGINEERING DRAWING IS THE PROPRIETARY PROPERTY OF COMPAL ELECTRONICS, INC. AND CONTAINS CONFIDENTIAL AND TRADE SECRET INFORMATION. THIS SHEET MAY NOT BE TRANSFERED FROM THE CUSTODY OF THE COMPETENT DIVISION OF R&D DEPARTMENT EXCEPT AS AUTHORIZED BY COMPAL ELECTRONICS, INC. NEITHER THIS SHEET NOR THE INFORMATION IT CONTAINS MAY BE USED BY OR DISCLOSED TO ANY THIRD PARTY WITHOUT PRIOR WRITTEN CONSENT OF COMPAL ELECTRONICS, INC.

Compal Electronics, Inc.

Title: **CLOCK GENERATOR**

Size: | Document Number: LA-4951P | Rev: 0.4

Date: Tuesday, July 28, 2009 | Sheet 12 of 48

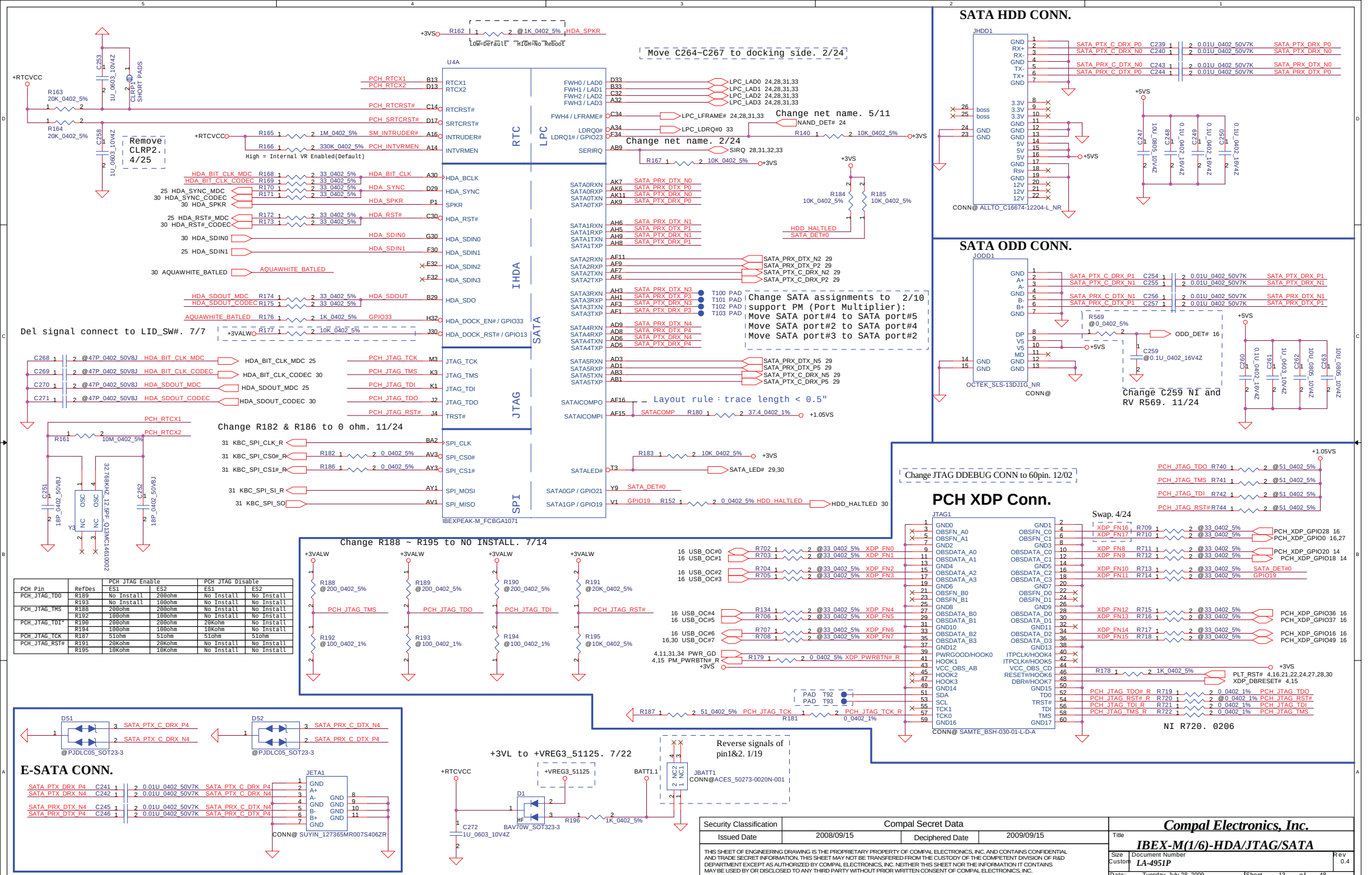

PCH Pin	RefDes	PCH JTAG Enable ES1	PCH JTAG Enable ES2	PCH JTAG Disable ES1	PCH JTAG Disable ES2
PCH_JTAG_TDO	R189	No Install	200ohm	No Install	No Install
	R193	No Install	100ohm	No Install	No Install
PCH_JTAG_TMS	R188	200ohm	200ohm	No Install	No Install
	R192	100ohm	100ohm	No Install	No Install
PCH_JTAG_TDI*	R190	200ohm	200ohm	20Kohm	No Install
	R194	100ohm	100ohm	10Kohm	No Install
PCH_JTAG_TCK	R187	51ohm	51ohm	51ohm	51ohm
PCH_JTAG_RST#	R191	20Kohm	20Kohm	No Install	No Install
	R195	10Kohm	10Kohm	No Install	No Install

Security Classification	Compal Secret Data		
Issued Date	2008/09/15	Deciphered Date	2009/09/15

THIS SHEET OF ENGINEERING DRAWING IS THE PROPRIETARY PROPERTY OF COMPAL ELECTRONICS, INC. AND CONTAINS CONFIDENTIAL AND TRADE SECRET INFORMATION. THIS SHEET MAY NOT BE TRANSFERED FROM THE CUSTODY OF THE COMPETENT DIVISION OF R&D DEPARTMENT EXCEPT AS AUTHORIZED BY COMPAL ELECTRONICS, INC. NEITHER THIS SHEET NOR THE INFORMATION IT CONTAINS MAY BE USED BY OR DISCLOSED TO ANY THIRD PARTY WITHOUT PRIOR WRITTEN CONSENT OF COMPAL ELECTRONICS, INC.

Compal Electronics, Inc.

Title: **IBEX-M(1/6)-HDA/JTAG/SATA**

Size	Document Number	Rev
Custom	LA-4951P	0.4

Date: Tuesday, July 28, 2009 | Sheet 13 of 48

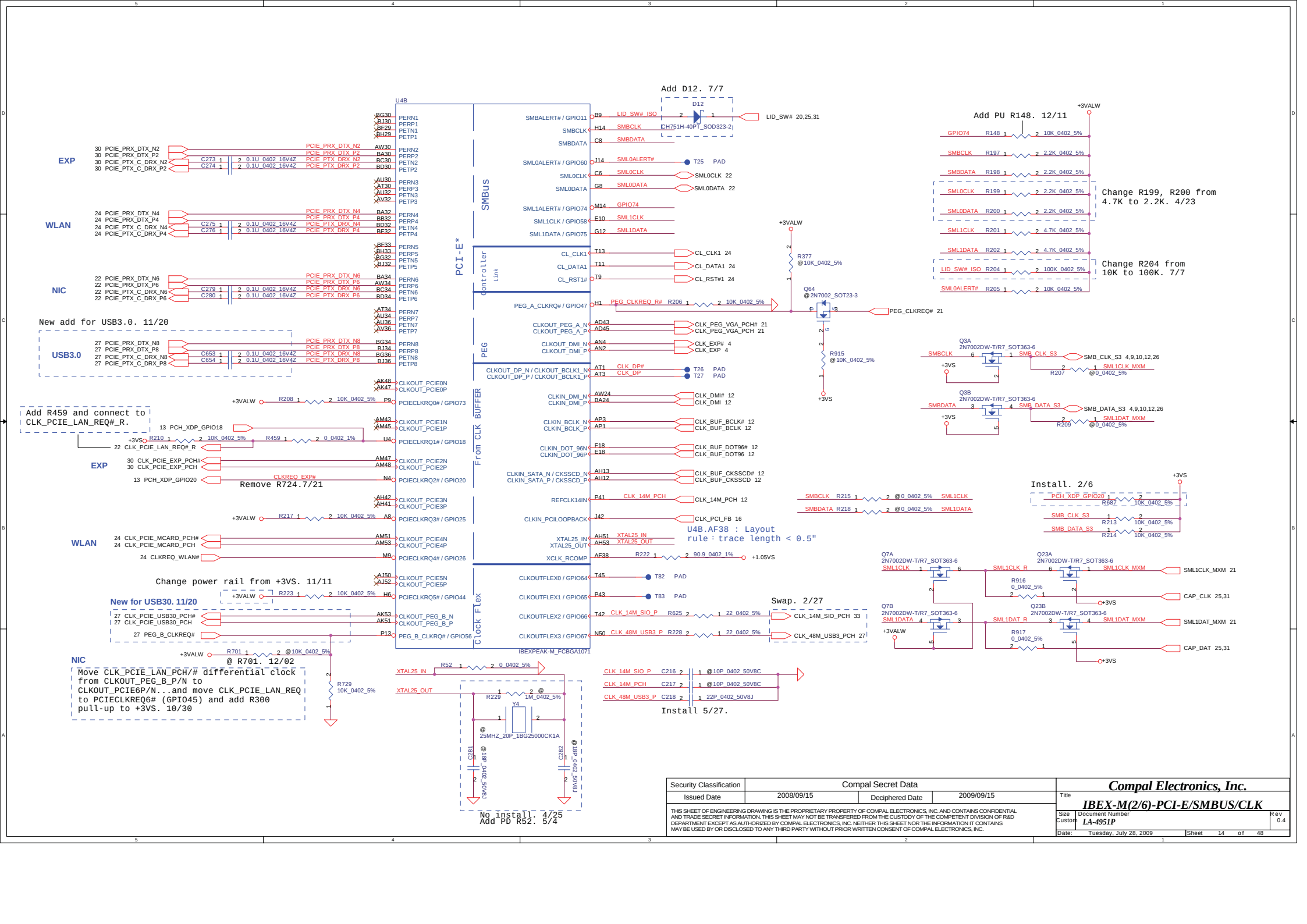

Security Classification	Compal Secret Data		
Issued Date	2008/09/15	Deciphered Date	2009/09/15

THIS SHEET OF ENGINEERING DRAWING IS THE PROPRIETARY PROPERTY OF COMPAL ELECTRONICS, INC. AND CONTAINS CONFIDENTIAL AND TRADE SECRET INFORMATION. THIS SHEET MAY NOT BE TRANSFERED FROM THE CUSTODY OF THE COMPETENT DIVISION OF R&D DEPARTMENT EXCEPT AS AUTHORIZED BY COMPAL ELECTRONICS, INC. NEITHER THIS SHEET NOR THE INFORMATION IT CONTAINS MAY BE USED BY OR DISCLOSED TO ANY THIRD PARTY WITHOUT PRIOR WRITTEN CONSENT OF COMPAL ELECTRONICS, INC.

Compal Electronics, Inc.

Title: **IBEX-M(2/6)-PCI-E/SMBUS/CLK**

Size	Document Number	Rev
Custom	LA-4951P	0.4

Date: Tuesday, July 28, 2009 | Sheet 14 of 48

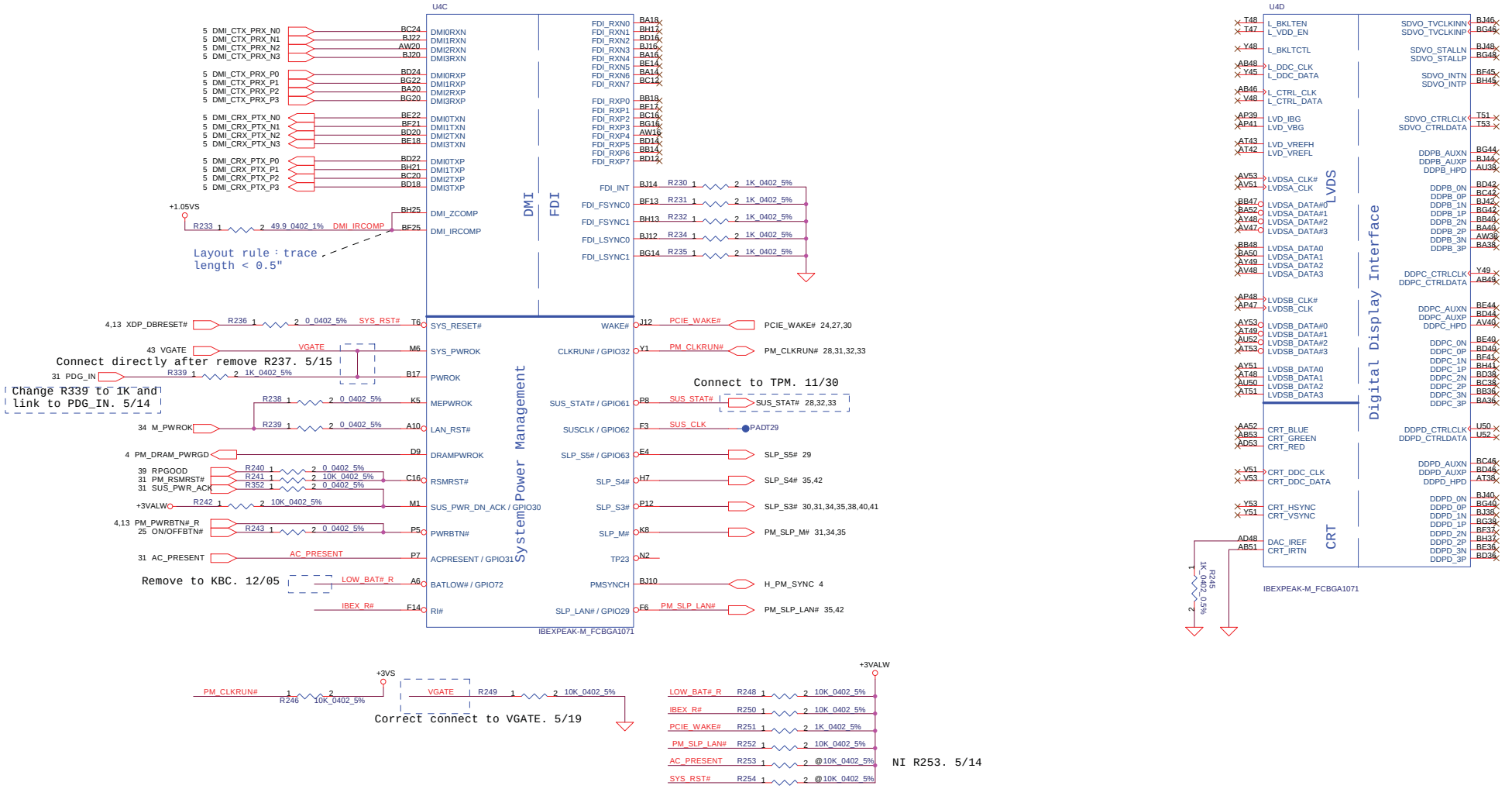

Security Classification	Compal Secret Data		
Issued Date	2008/09/15	Deciphered Date	2009/09/15

THIS SHEET OF ENGINEERING DRAWING IS THE PROPRIETARY PROPERTY OF COMPAL ELECTRONICS, INC. AND CONTAINS CONFIDENTIAL AND TRADE SECRET INFORMATION. THIS SHEET MAY NOT BE TRANSFERED FROM THE CUSTODY OF THE COMPETENT DIVISION OF R&D DEPARTMENT EXCEPT AS AUTHORIZED BY COMPAL ELECTRONICS, INC. NEITHER THIS SHEET NOR THE INFORMATION IT CONTAINS MAY BE USED BY OR DISCLOSED TO ANY THIRD PARTY WITHOUT PRIOR WRITTEN CONSENT OF COMPAL ELECTRONICS, INC.

Compal Electronics, Inc.

Title: **IBEX-M(3/6)-DMI/GPIO/LVDS**

Size: Custom | Document Number: LA-4951P | Rev: 0.4

Date: Tuesday, July 28, 2009 | Sheet 15 of 48

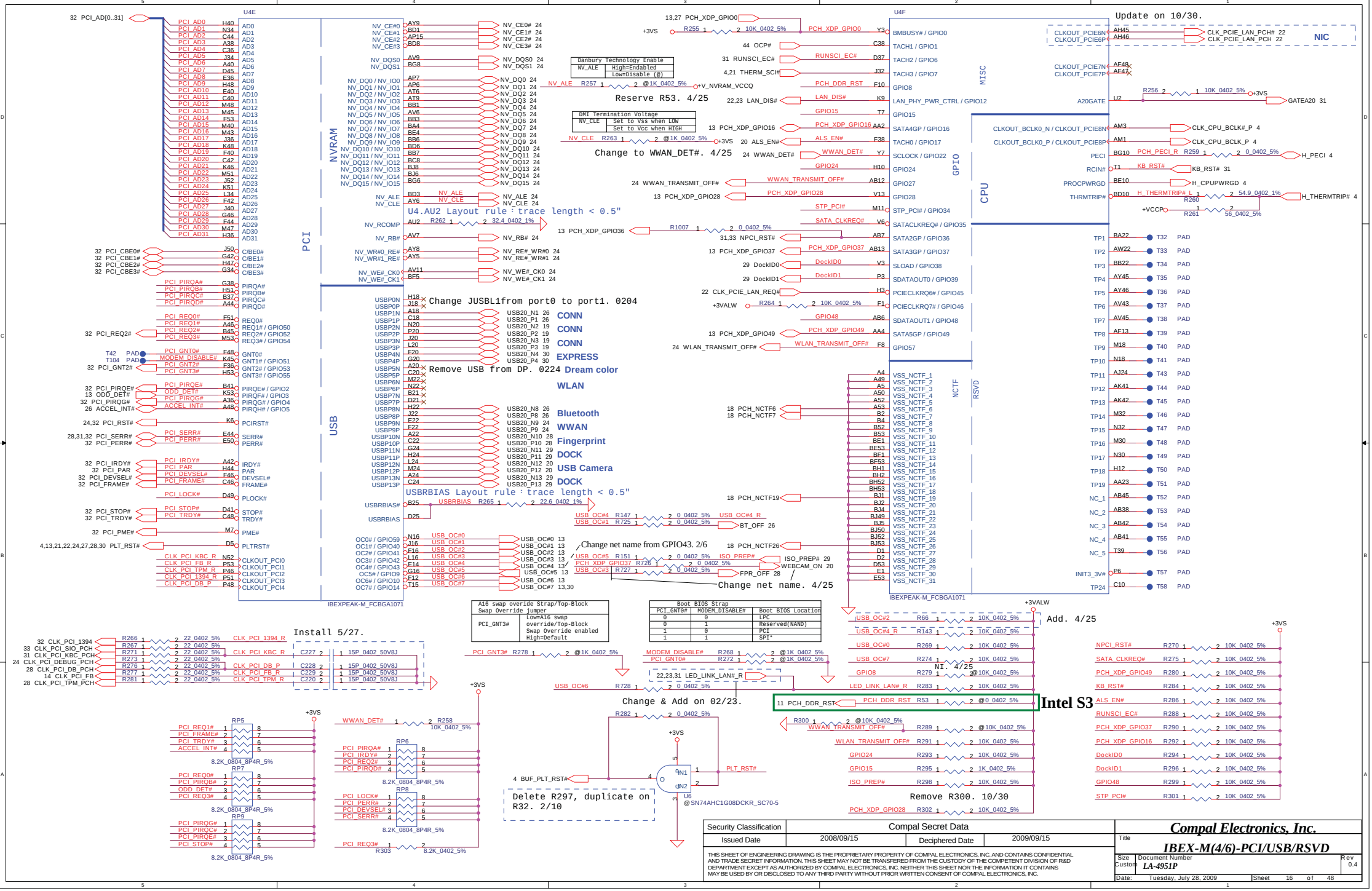
U4E
PCI
NVRAM
USB
IBEXPEAK-M_FCBGA1071
U4F
MISC
GPIO
CPU
NCTF
RSVD
Update on 10/30.
NIC
Danbury Technology Enable
NV_ALE High=Endablled Low=Disable (@)
DMI Termination Voltage
NV_CLE Set to Vss when LOW Set to Vcc when HIGH
Reserve R53. 4/25
Change to WWAN_DET#. 4/25
U4.AU2 Layout rule : trace length < 0.5"
Change JUSBL1from port0 to port1. 0204
CONN
CONN
CONN
EXPRESS
Remove USB from DP. 0224
Dream color
WLAN
Bluetooth
WWAN
Fingerprint
DOCK
USB Camera
DOCK
USBRBIAS Layout rule : trace length < 0.5"
Change net name from GPIO43. 2/6
Change net name. 4/25
Install 5/27.
A16 swap overide Strap/Top-Block Swap Override jumper
PCI_GNT3# Low=A16 swap overide/Top-Block Swap Override enabled High=Default
Boot BIOS Strap
PCI_GNT0# MODEM_DISABLE# Boot BIOS Location
0 0 LPC
0 1 Reserved(NAND)
1 0 PCI
1 1 SPI*
Add. 4/25
NI. 4/25
Change & Add on 02/23.
Intel S3
Delete R297, duplicate on R32. 2/10
Remove R300. 10/30
Security Classification Compal Secret Data
Issued Date 2008/09/15 Deciphered Date 2009/09/15
Compal Electronics, Inc.
Title IBEX-M(4/6)-PCI/USB/RSVD
Size Custom Document Number LA-4951P Rev 0.4
Date: Tuesday, July 28, 2009 Sheet 16 of 48

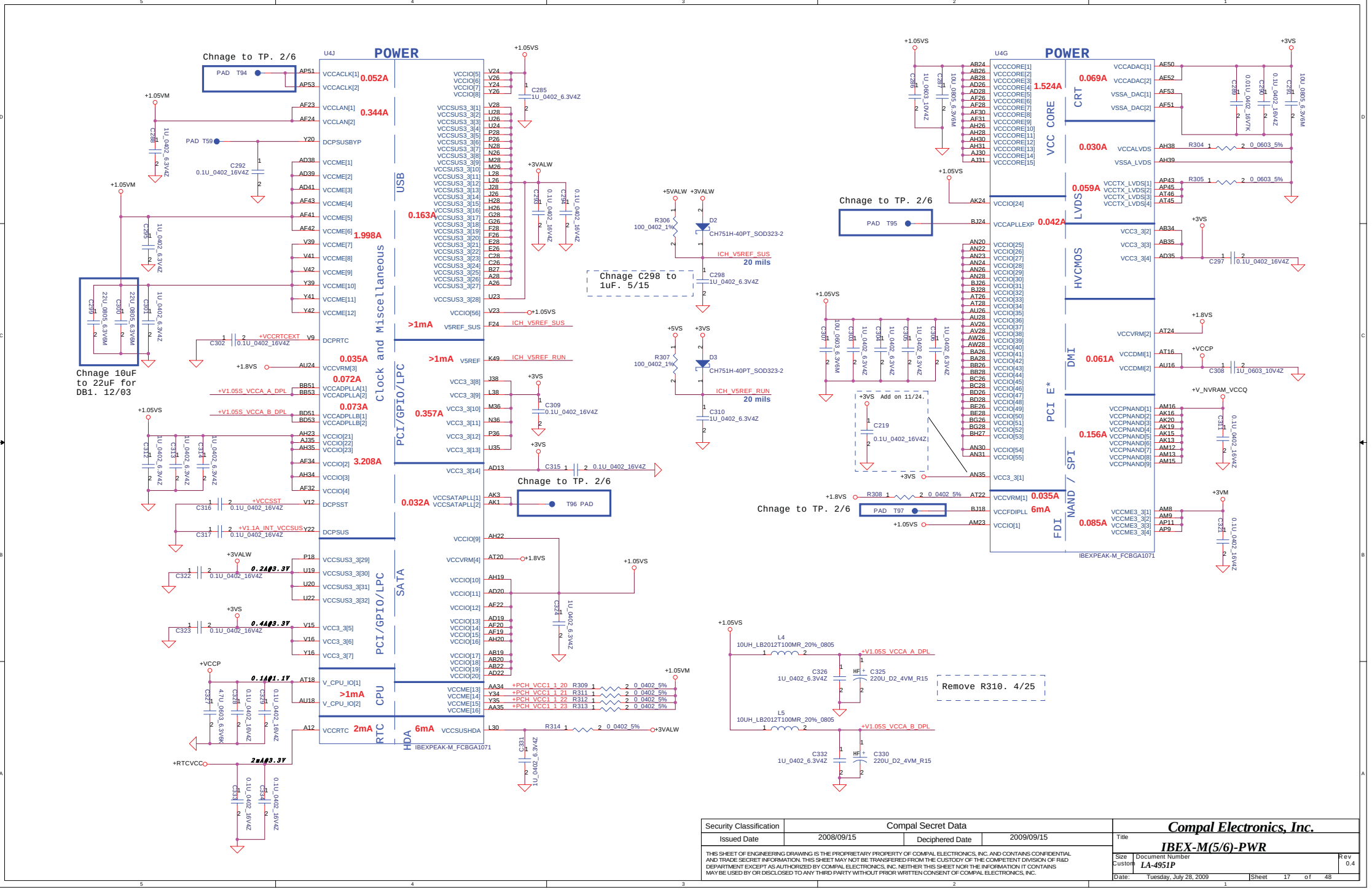

Security Classification	Compal Secret Data		
Issued Date	2008/09/15	Deciphered Date	2009/09/15

THIS SHEET OF ENGINEERING DRAWING IS THE PROPRIETARY PROPERTY OF COMPAL ELECTRONICS, INC. AND CONTAINS CONFIDENTIAL AND TRADE SECRET INFORMATION. THIS SHEET MAY NOT BE TRANSFERED FROM THE CUSTODY OF THE COMPETENT DIVISION OF R&D DEPARTMENT EXCEPT AS AUTHORIZED BY COMPAL ELECTRONICS, INC. NEITHER THIS SHEET NOR THE INFORMATION IT CONTAINS MAY BE USED BY OR DISCLOSED TO ANY THIRD PARTY WITHOUT PRIOR WRITTEN CONSENT OF COMPAL ELECTRONICS, INC.

Compal Electronics, Inc.

Title: **IBEX-M(5/6)-PWR**

Size: Custom | Document Number: LA-4951P | Rev: 0.4

Date: Tuesday, July 28, 2009 | Sheet 17 of 48

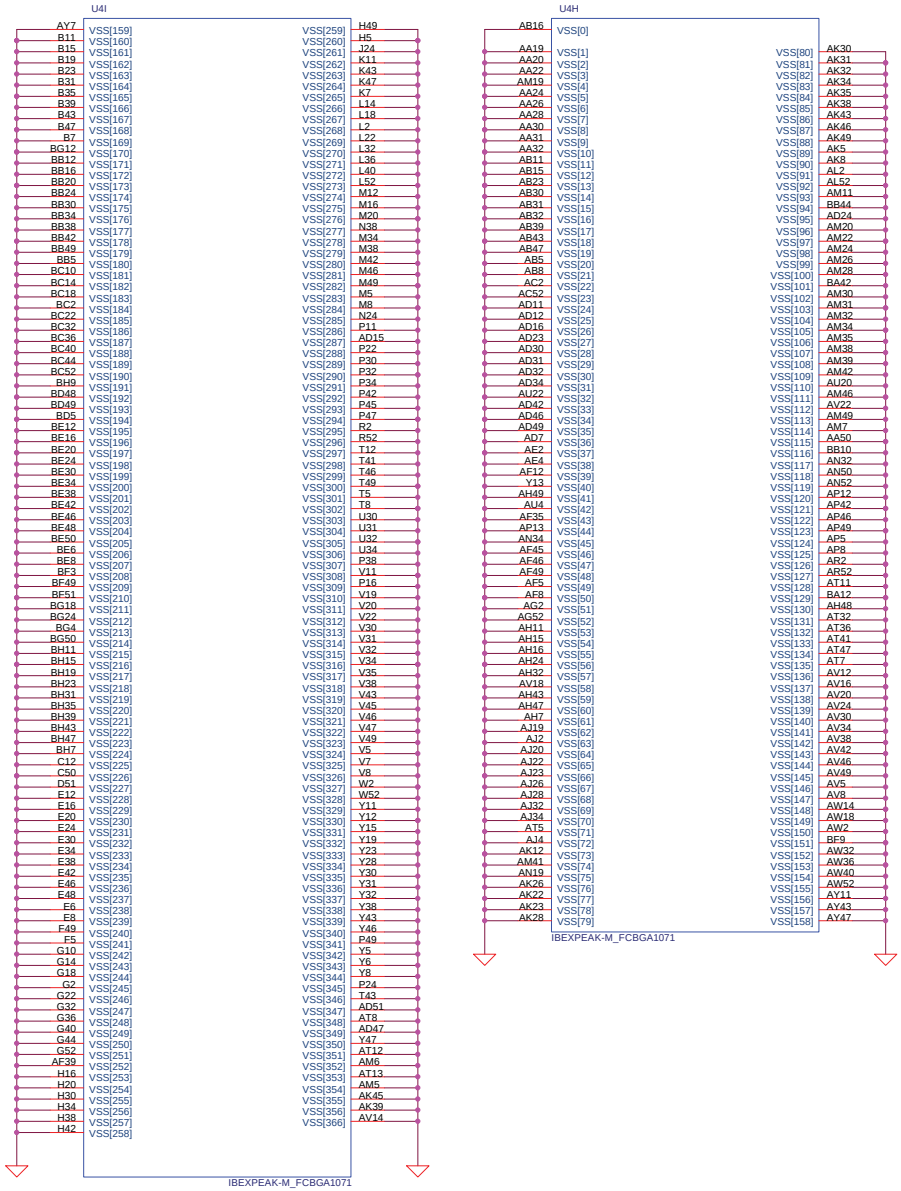

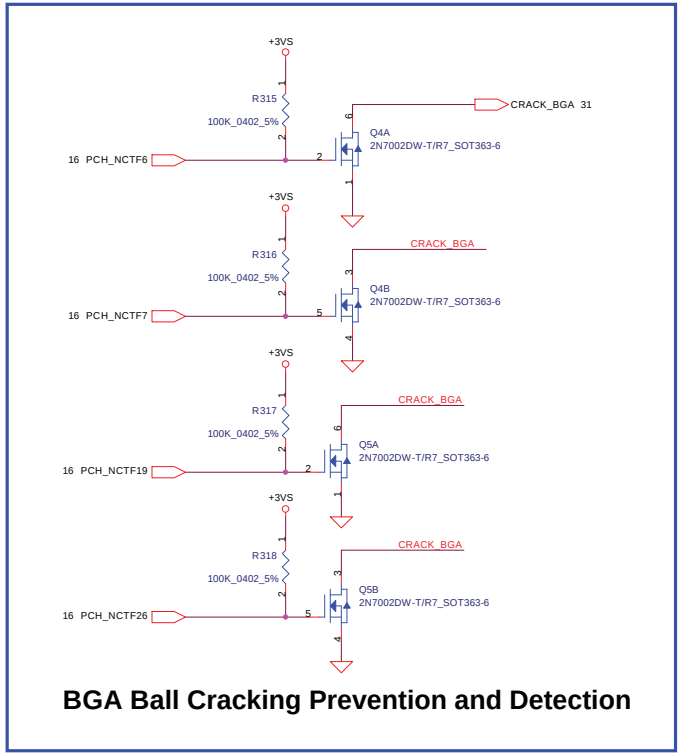

Security Classification	Compal Secret Data		
Issued Date	2008/09/15	Deciphered Date	2009/09/15

THIS SHEET OF ENGINEERING DRAWING IS THE PROPRIETARY PROPERTY OF COMPAL ELECTRONICS, INC. AND CONTAINS CONFIDENTIAL AND TRADE SECRET INFORMATION. THIS SHEET MAY NOT BE TRANSFERED FROM THE CUSTODY OF THE COMPETENT DIVISION OF R&D DEPARTMENT EXCEPT AS AUTHORIZED BY COMPAL ELECTRONICS, INC. NEITHER THIS SHEET NOR THE INFORMATION IT CONTAINS MAY BE USED BY OR DISCLOSED TO ANY THIRD PARTY WITHOUT PRIOR WRITTEN CONSENT OF COMPAL ELECTRONICS, INC.

Compal Electronics, Inc.

Title: **IBEX-M(6/6)-GND**

Size: Custom | Document Number: LA-4951P | Rev: 0.4

Date: Tuesday, July 28, 2009 | Sheet 18 of 48

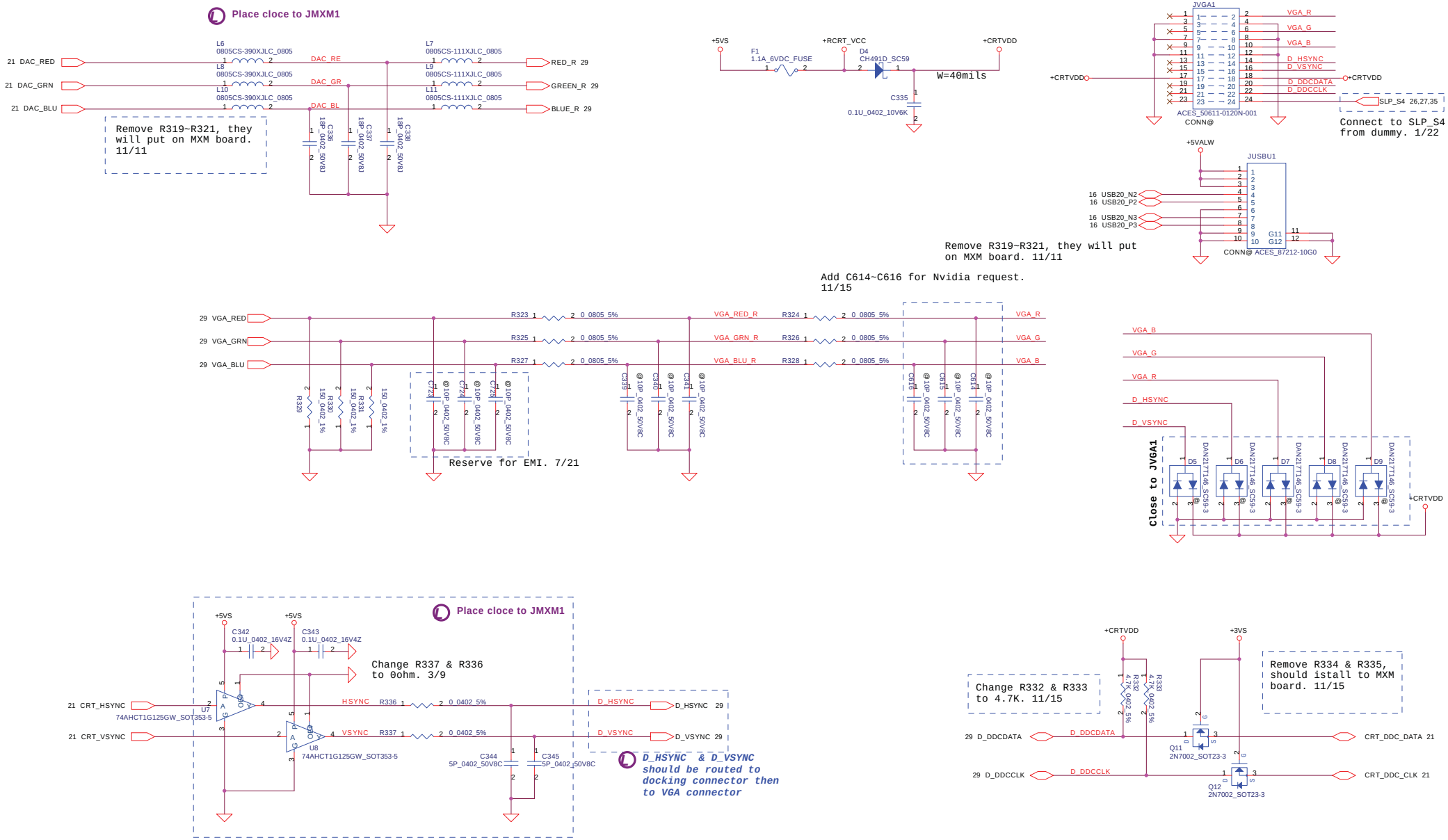

Security Classification	Compal Secret Data		
Issued Date	2008/09/15	Deciphered Date	2009/09/15

THIS SHEET OF ENGINEERING DRAWING IS THE PROPRIETARY PROPERTY OF COMPAL ELECTRONICS, INC. AND CONTAINS CONFIDENTIAL AND TRADE SECRET INFORMATION. THIS SHEET MAY NOT BE TRANSFERED FROM THE CUSTODY OF THE COMPETENT DIVISION OF R&D DEPARTMENT EXCEPT AS AUTHORIZED BY COMPAL ELECTRONICS, INC. NEITHER THIS SHEET NOR THE INFORMATION IT CONTAINS MAY BE USED BY OR DISCLOSED TO ANY THIRD PARTY WITHOUT PRIOR WRITTEN CONSENT OF COMPAL ELECTRONICS, INC.

Compal Electronics, Inc.

Title: **CRT & USB Connector**

Size	Document Number	Rev
	LA-4951P	0.4

Date: Tuesday, July 28, 2009 | Sheet 19 of 48

LCD POWER CIRCUIT

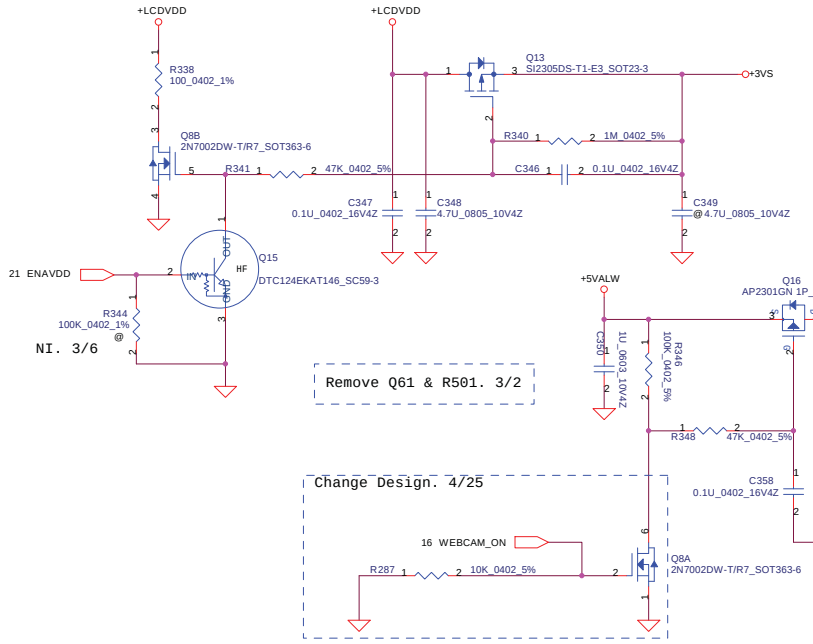

LCD/PANEL BD. CONN.

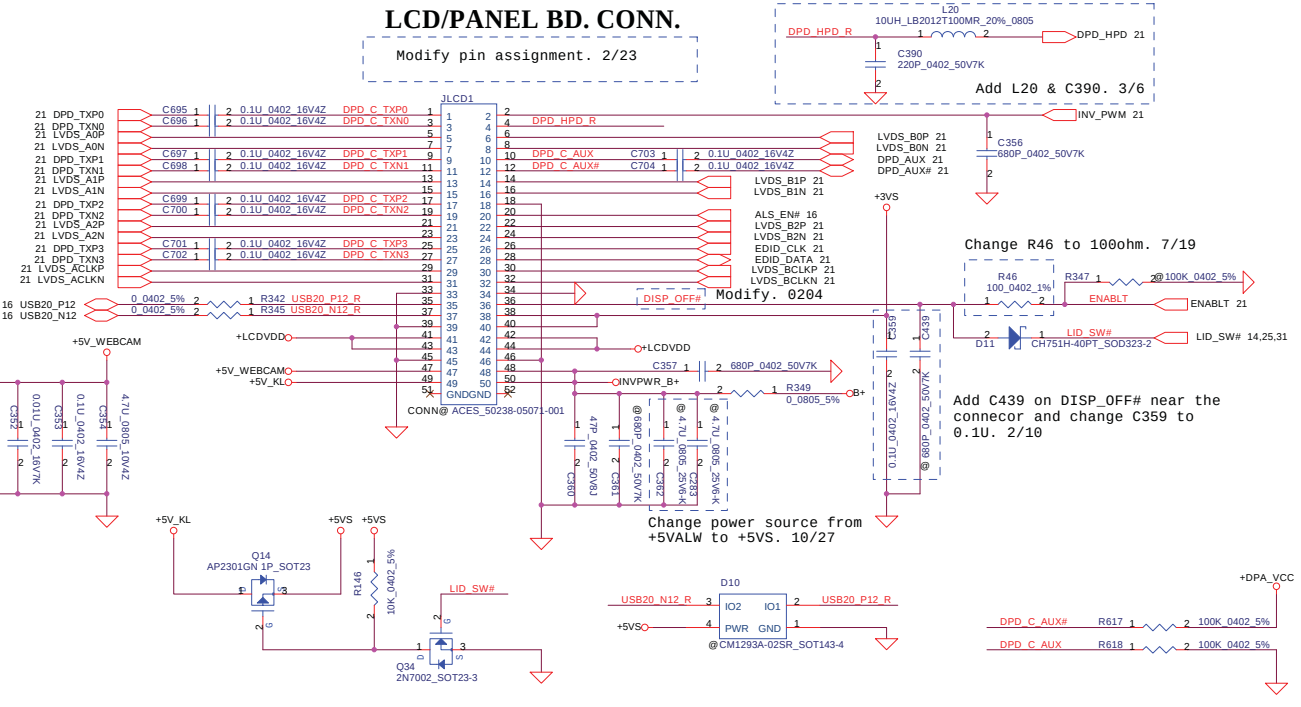

Display port Connector

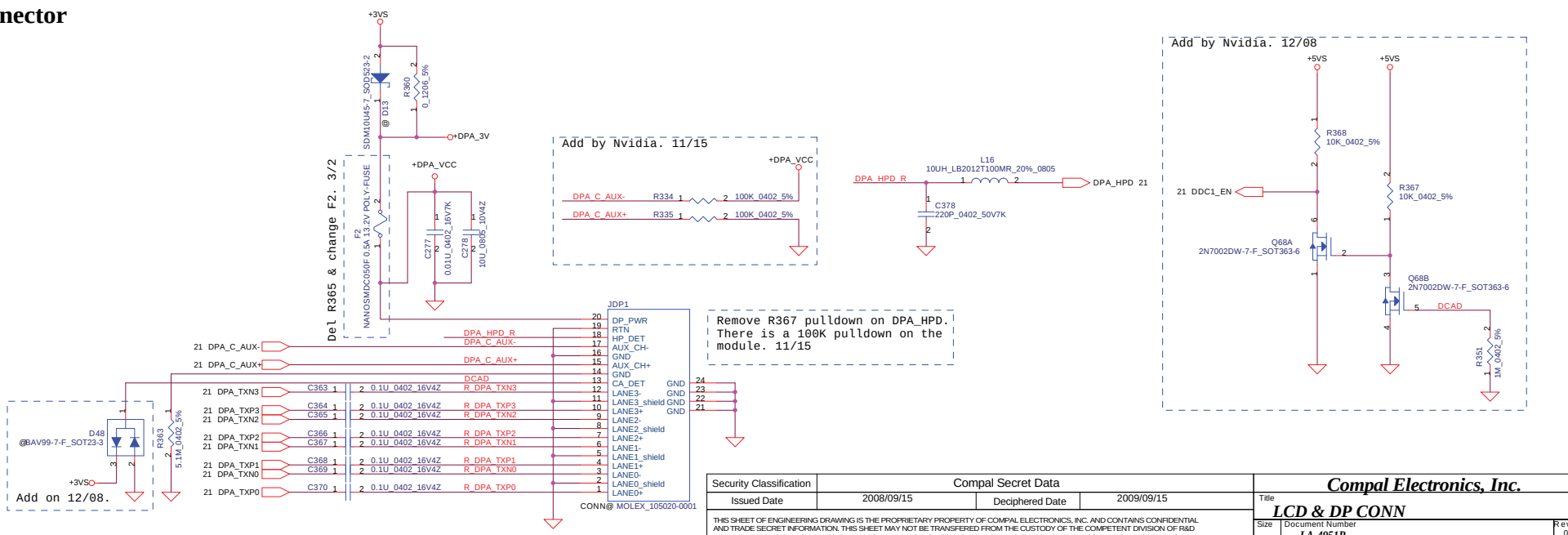

Security Classification	Compal Secret Data		
Issued Date	2008/09/15	Deciphered Date	2009/09/15

THIS SHEET OF ENGINEERING DRAWING IS THE PROPRIETARY PROPERTY OF COMPAL ELECTRONICS, INC. AND CONTAINS CONFIDENTIAL AND TRADE SECRET INFORMATION. THIS SHEET MAY NOT BE TRANSFERED FROM THE CUSTODY OF THE COMPETENT DIVISION OF R&D DEPARTMENT EXCEPT AS AUTHORIZED BY COMPAL ELECTRONICS, INC. NEITHER THIS SHEET NOR THE INFORMATION IT CONTAINS MAY BE USED BY OR DISCLOSED TO ANY THIRD PARTY WITHOUT PRIOR WRITTEN CONSENT OF COMPAL ELECTRONICS, INC.

Compal Electronics, Inc.

Title: **LCD & DP CONN**

Size	Document Number	Rev
	LA-4951P	0.4

Date: Tuesday, July 28, 2009 | Sheet 20 of 48

Layout Note: DPB_HPD and DPC_HPD must not routed close to high speed signals.

Remove Q19 & R376. 2/24
Remove C377. 7/10

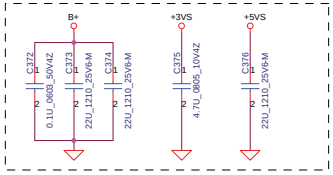

Layout Note:
Place as close as to MXM connector

Install Q69. 2/24

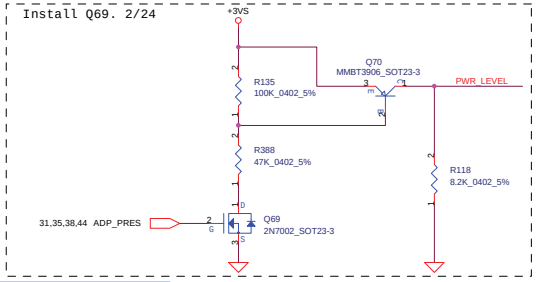

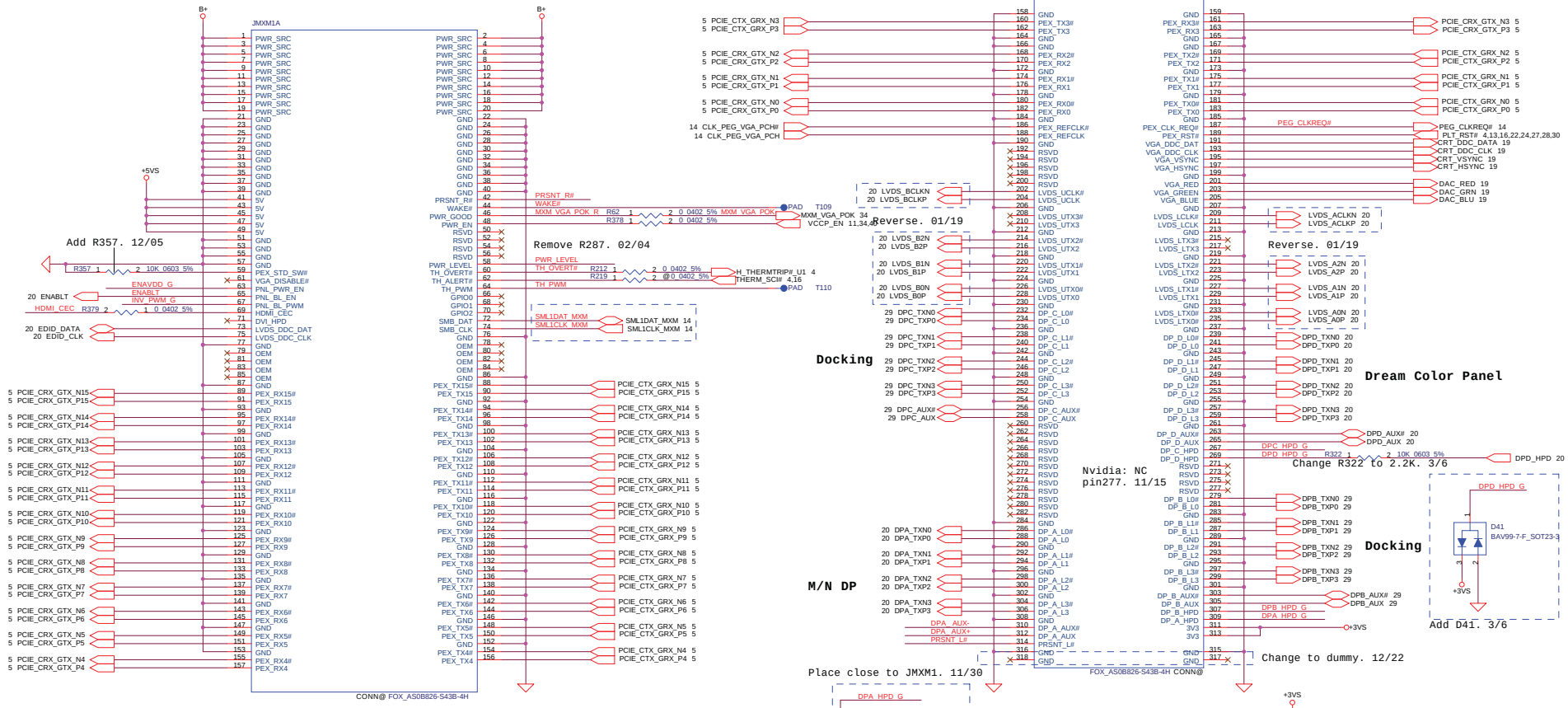

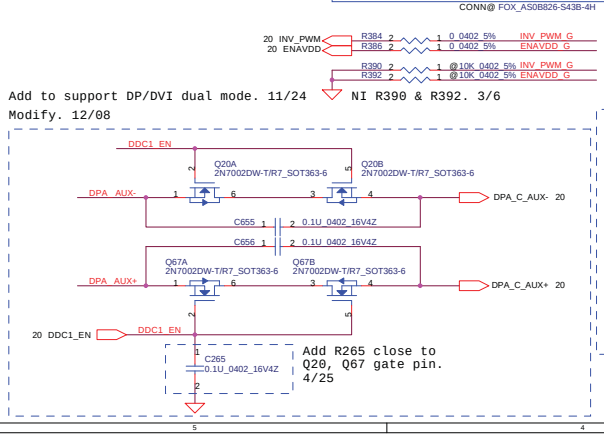

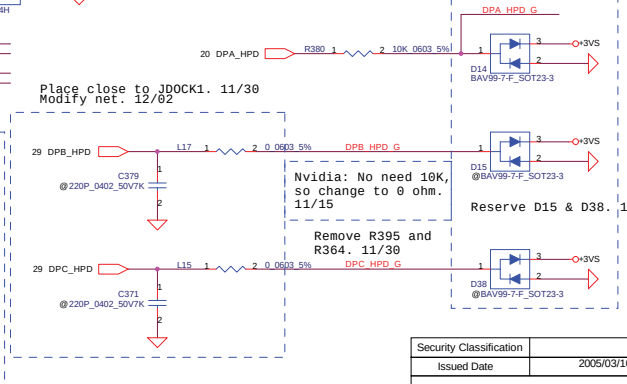

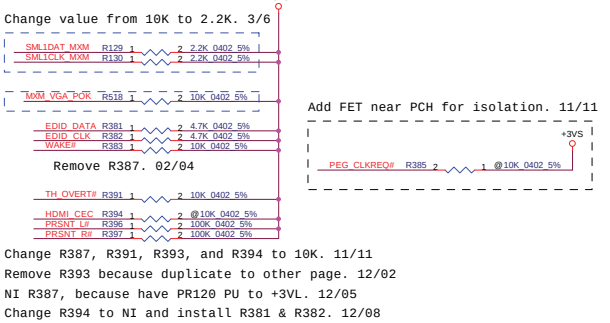

Security Classification	Compal Secret Data		
Issued Date	2005/03/10	Deciphered Date	2006/03/10

THIS SHEET OF ENGINEERING DRAWING IS THE PROPRIETARY PROPERTY OF COMPAL ELECTRONICS, INC. AND CONTAINS CONFIDENTIAL AND TRADE SECRET INFORMATION. THIS SHEET MAY NOT BE TRANSFERED FROM THE CUSTODY OF THE COMPETENT DIVISION OF R&D DEPARTMENT EXCEPT AS AUTHORIZED BY COMPAL ELECTRONICS, INC. NEITHER THIS SHEET NOR THE INFORMATION IT CONTAINS MAY BE USED BY OR DISCLOSED TO ANY THIRD PARTY WITHOUT PRIOR WRITTEN CONSENT OF COMPAL ELECTRONICS, INC.

Compal Electronics, Inc.

Title: **MXM-III CONN**

Size	Document Number	Rev
	LA-4951P	0.4

Date: Tuesday, July 28, 2009 | Sheet 21 of 48

Update on 10/27.

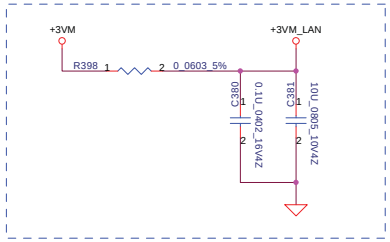

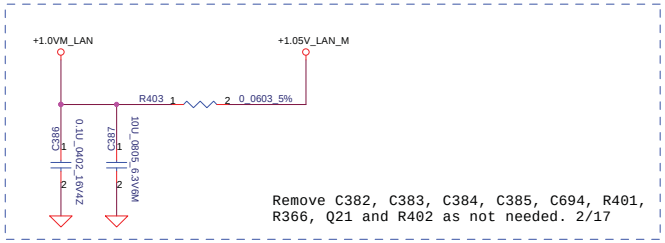

Remove C382, C383, C384, C385, C694, R401, R366, Q21 and R402 as not needed. 2/17

Remove note. 0205

Remove C388, C389, C390, & C393 on +1.0VM_LAN; Remove C394, C396 & C397 on +3.3VM_LAN_OUT_R; Remove C399 & C400 on +1.0VM_LAN4; Remove C401 on +1.0VM_LAN3; and Remove C402 on +1.0VM_LAN2 as done in Intel's RedFort CRB

Remove Q17, R124, and R405 (Intel confirmed isolation not required for Hanksville)
2/23

Remove R354, R355, Q22A, Q22B; and connect SML0CLK and SML0DATA directly to LAN_SM_CLK and LAN_SM_DAT. 2/23

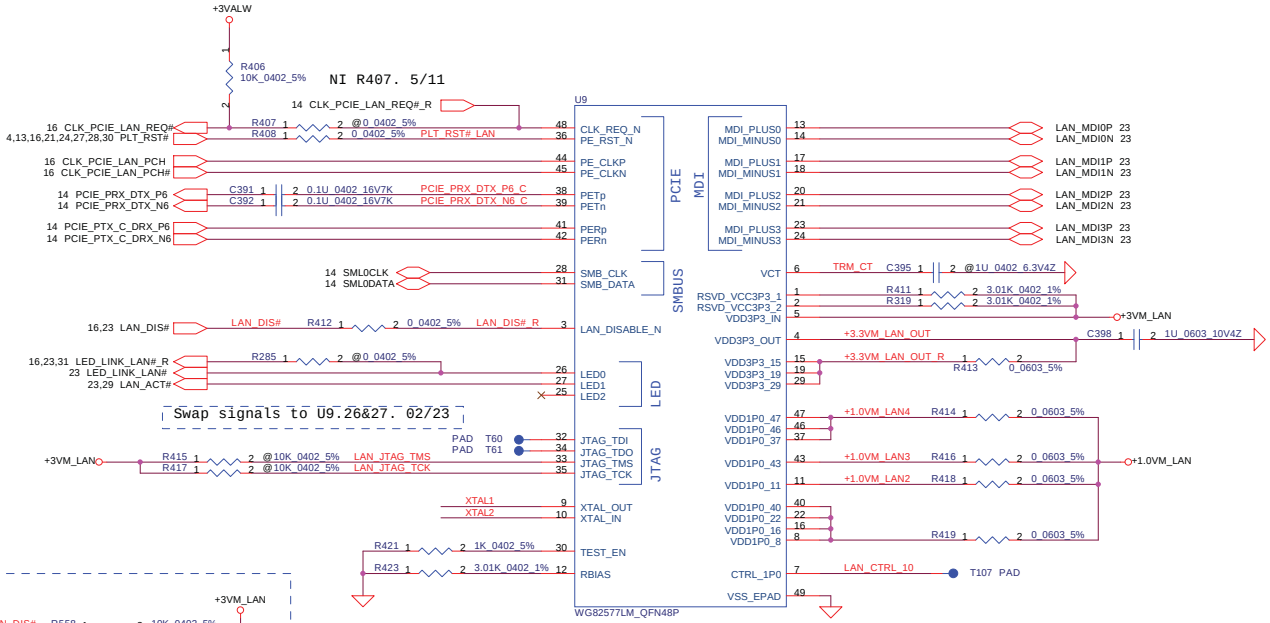

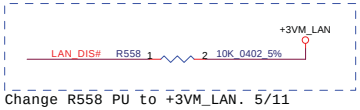

Change R558 PU to +3VM_LAN. 5/11

Add on 12/4.

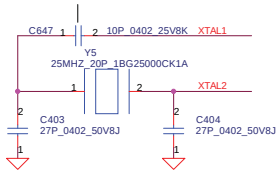

Security Classification	Compal Secret Data		
Issued Date	2008/09/15	Deciphered Date	2009/12/31

THIS SHEET OF ENGINEERING DRAWING IS THE PROPRIETARY PROPERTY OF COMPAL ELECTRONICS, INC. AND CONTAINS CONFIDENTIAL AND TRADE SECRET INFORMATION. THIS SHEET MAY NOT BE TRANSFERED FROM THE CUSTODY OF THE COMPETENT DIVISION OF R&D DEPARTMENT EXCEPT AS AUTHORIZED BY COMPAL ELECTRONICS, INC. NEITHER THIS SHEET NOR THE INFORMATION IT CONTAINS MAY BE USED BY OR DISCLOSED TO ANY THIRD PARTY WITHOUT PRIOR WRITTEN CONSENT OF COMPAL ELECTRONICS, INC.

Compal Electronics, Inc.

Title: **Intel 82578 Hanksville-LM**

Size: | Document Number: *LA-4951P* | Rev: 0.4

Date: Tuesday, July 28, 2009 | Sheet 22 of 48

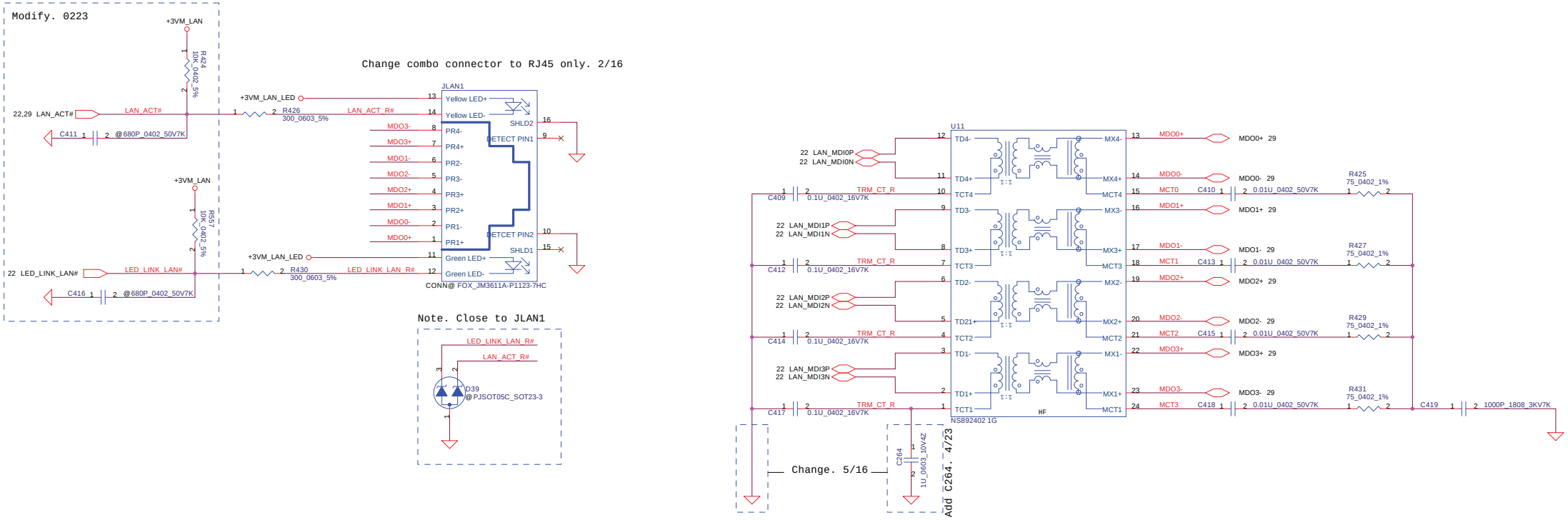

Modify & remove Q63A & R132. 02/23

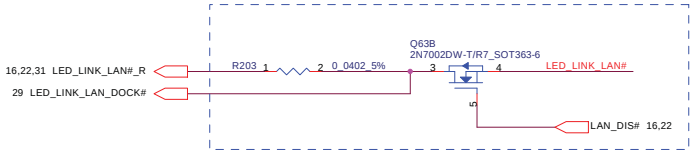

Change on 12/17.

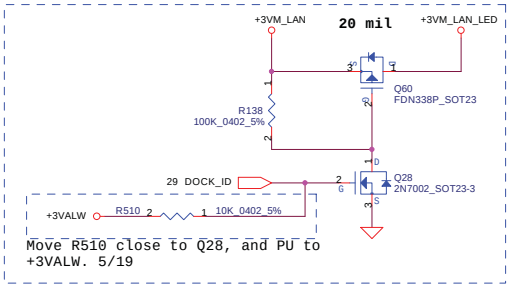

Security Classification	Compal Secret Data		
Issued Date	2008/09/15	Deciphered Date	2009/09/15

THIS SHEET OF ENGINEERING DRAWING IS THE PROPRIETARY PROPERTY OF COMPAL ELECTRONICS, INC. AND CONTAINS CONFIDENTIAL AND TRADE SECRET INFORMATION. THIS SHEET MAY NOT BE TRANSFERED FROM THE CUSTODY OF THE COMPETENT DIVISION OF R&D DEPARTMENT EXCEPT AS AUTHORIZED BY COMPAL ELECTRONICS, INC. NEITHER THIS SHEET NOR THE INFORMATION IT CONTAINS MAY BE USED BY OR DISCLOSED TO ANY THIRD PARTY WITHOUT PRIOR WRITTEN CONSENT OF COMPAL ELECTRONICS, INC.

Compal Electronics, Inc.

Title: **Magnetic & RJ45**

Size	Document Number	Rev
	LA-4951P	0.4

Date: Tuesday, July 28, 2009 | Sheet 23 of 48

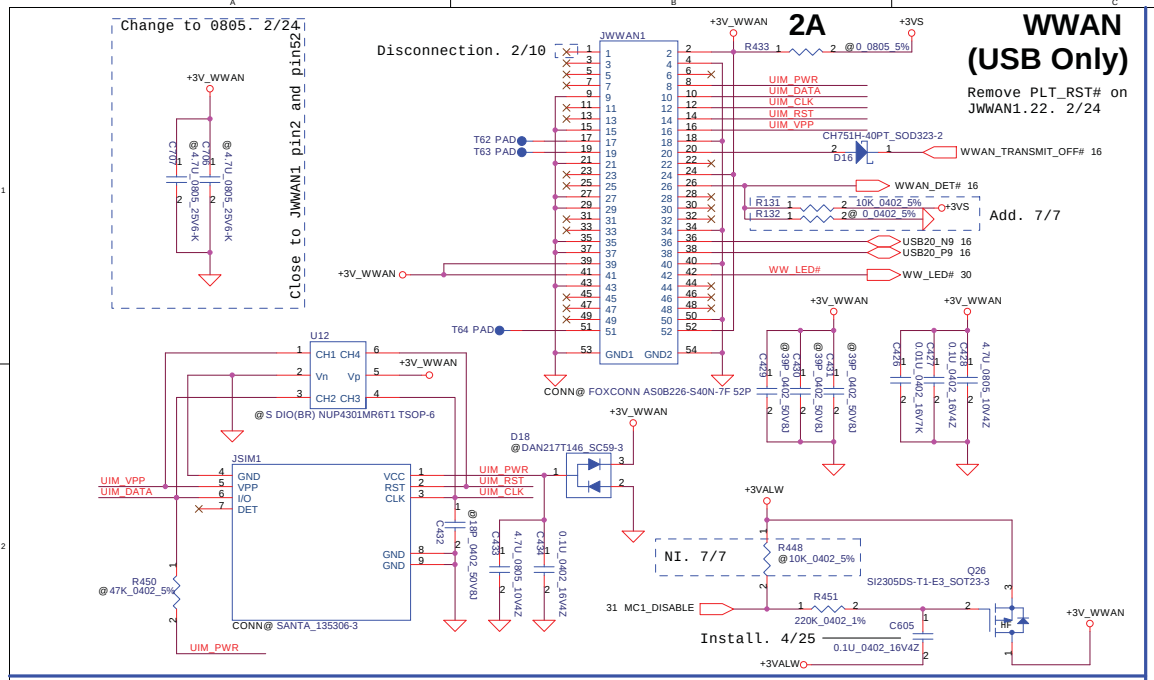

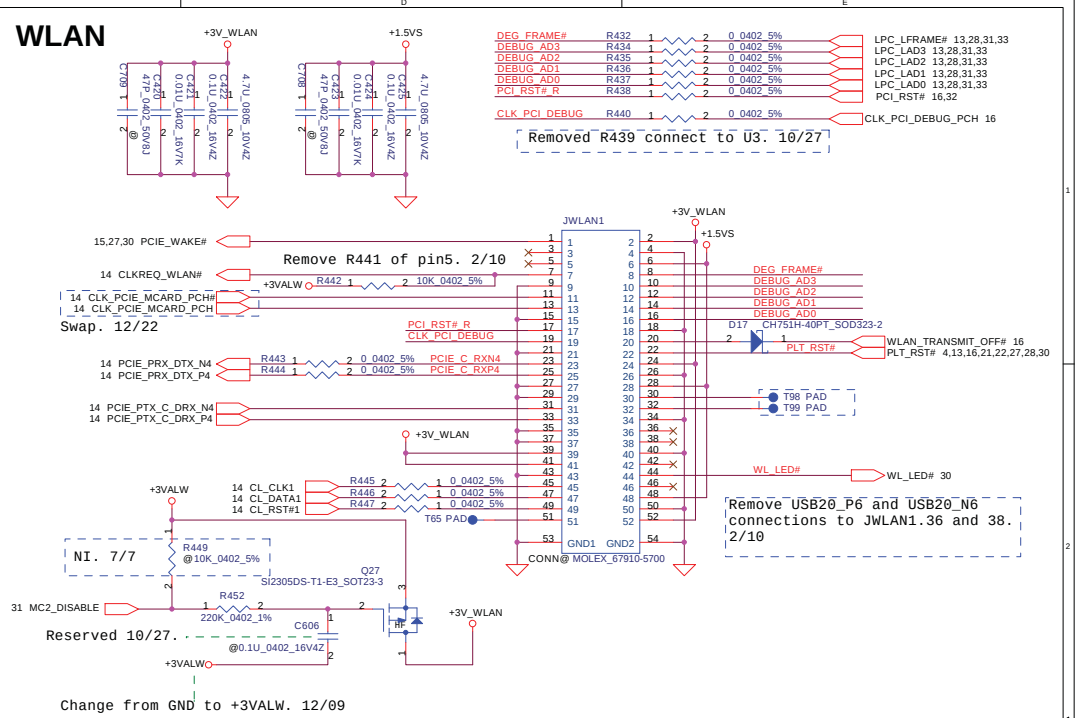

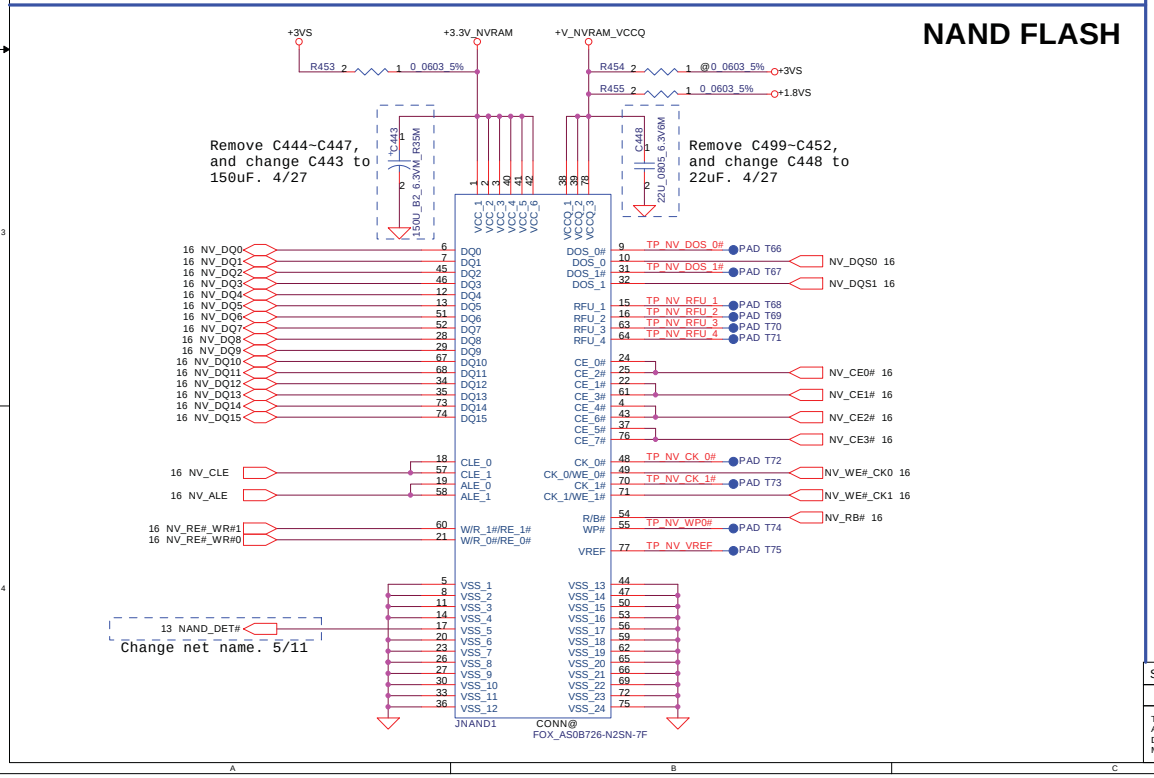

Remove UWB. (10/24)

Security Classification	Compal Secret Data		
Issued Date	2008/09/15	Deciphered Date	2009/09/15

THIS SHEET OF ENGINEERING DRAWING IS THE PROPRIETARY PROPERTY OF COMPAL ELECTRONICS, INC. AND CONTAINS CONFIDENTIAL AND TRADE SECRET INFORMATION. THIS SHEET MAY NOT BE TRANSFERED FROM THE CUSTODY OF THE COMPETENT DIVISION OF R&D DEPARTMENT EXCEPT AS AUTHORIZED BY COMPAL ELECTRONICS, INC. NEITHER THIS SHEET NOR THE INFORMATION IT CONTAINS MAY BE USED BY OR DISCLOSED TO ANY THIRD PARTY WITHOUT PRIOR WRITTEN CONSENT OF COMPAL ELECTRONICS, INC.

Compal Electronics, Inc.

Title: **WWAN/NAND mini**

Size	Document Number	Rev
	LA-4951P	0.4

Date: Tuesday, July 28, 2009 | Sheet 24 of 48

CAP SWITCH BOARD.

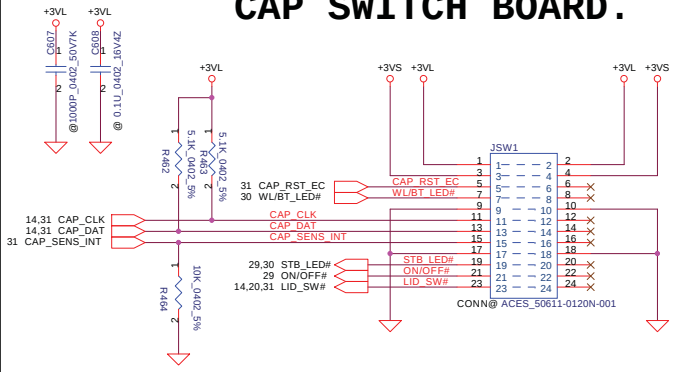

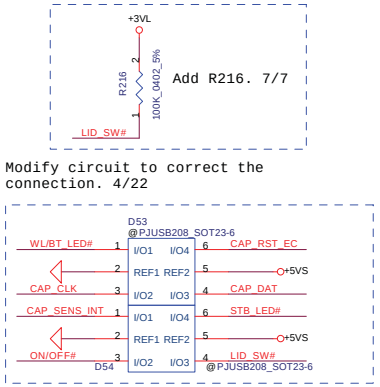

INT_KBD CONN.

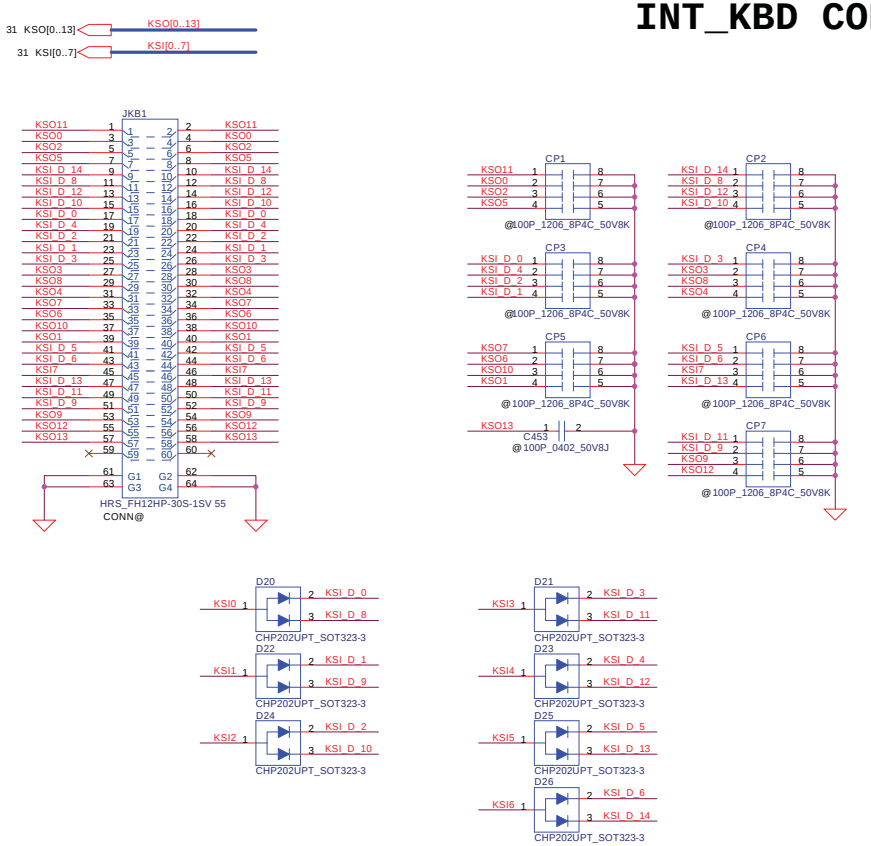

MDC 1.5 Conn.

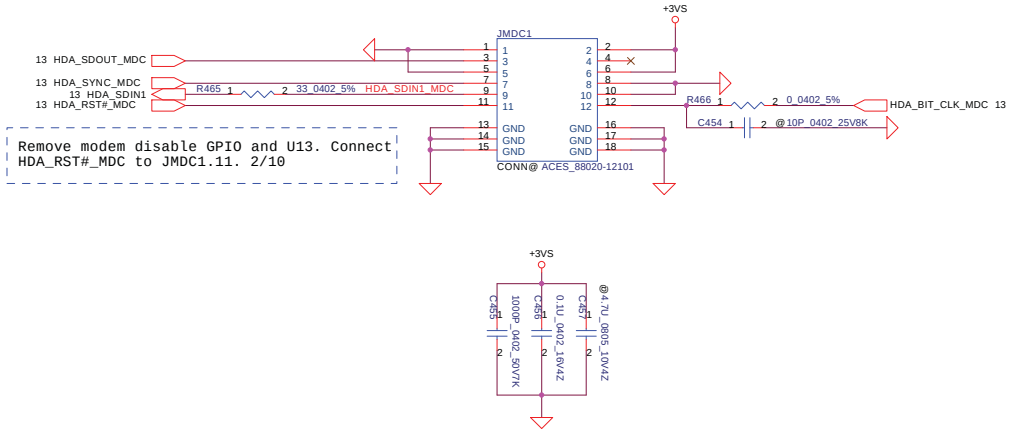

Remove modem disable GPIO and U13. Connect HDA_RST#_MDC to JMDC1.11. 2/10

Track Point CONN.

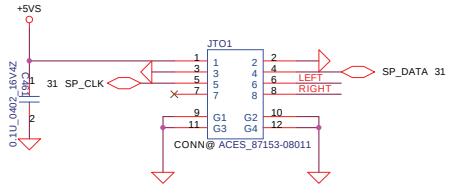

Touch Pad CONN.

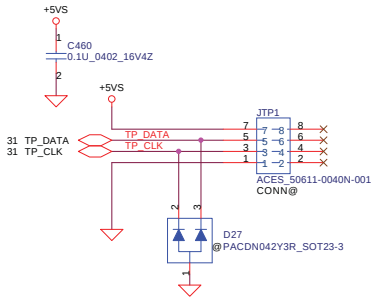

Power button

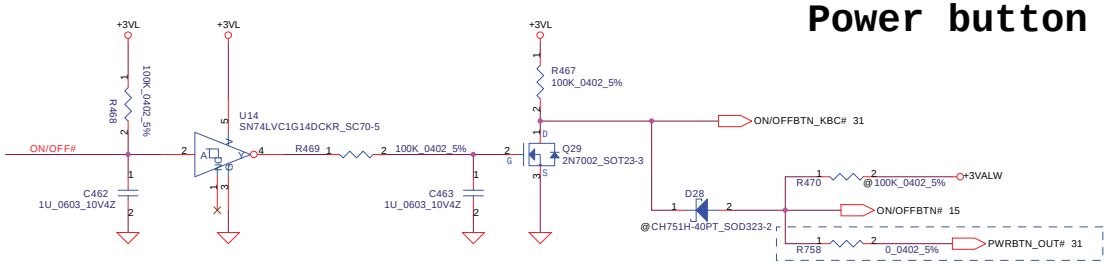

Add on 7/21

Security Classification	Compal Secret Data		
Issued Date	2008/09/15	Deciphered Date	2009/09/15

THIS SHEET OF ENGINEERING DRAWING IS THE PROPRIETARY PROPERTY OF COMPAL ELECTRONICS, INC. AND CONTAINS CONFIDENTIAL AND TRADE SECRET INFORMATION. THIS SHEET MAY NOT BE TRANSFERED FROM THE CUSTODY OF THE COMPETENT DIVISION OF R&D DEPARTMENT EXCEPT AS AUTHORIZED BY COMPAL ELECTRONICS, INC. NEITHER THIS SHEET NOR THE INFORMATION IT CONTAINS MAY BE USED BY OR DISCLOSED TO ANY THIRD PARTY WITHOUT PRIOR WRITTEN CONSENT OF COMPAL ELECTRONICS, INC.

Compal Electronics, Inc.

Title: MDC/KBD/ON_OFF/LID

Size | Document Number: LA-4951P | Rev: 0.4

Date: Tuesday, July 28, 2009 | Sheet 25 of 48

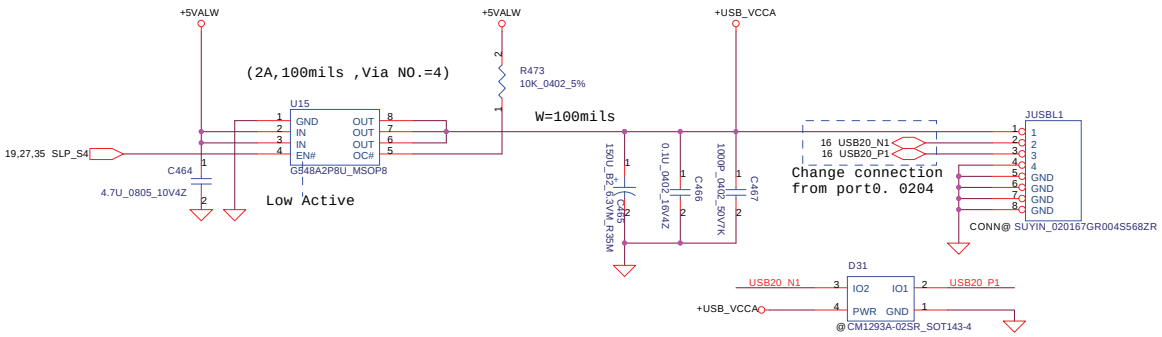

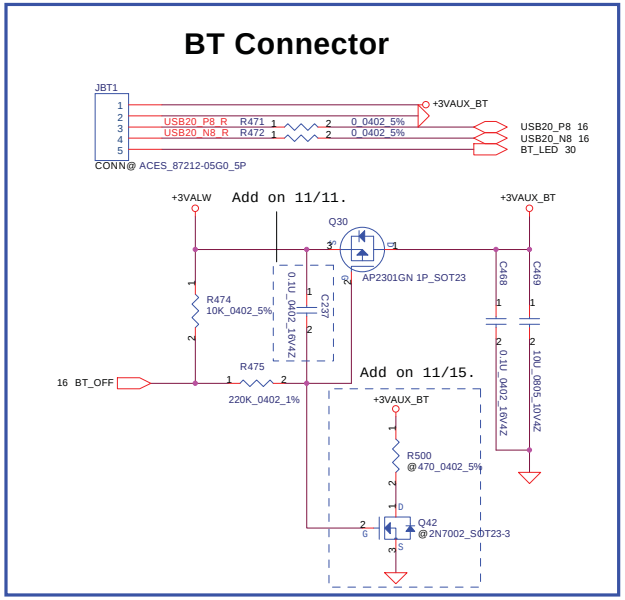

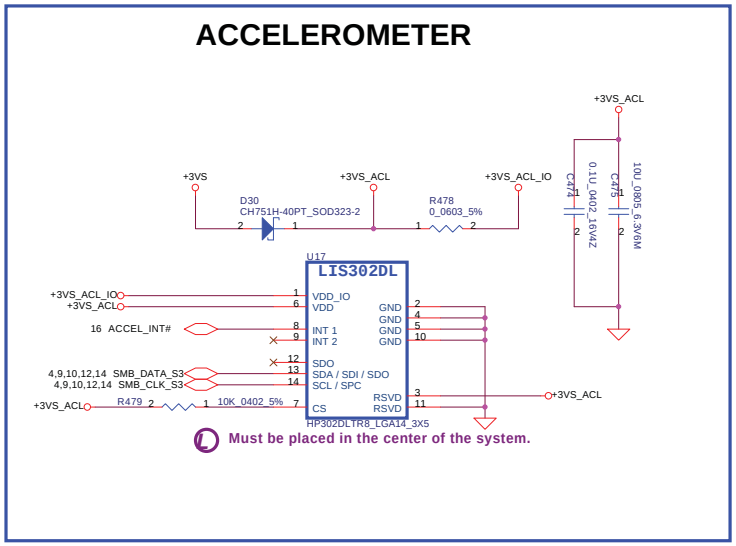

Security Classification	Compal Secret Data		
Issued Date	2008/09/15	Deciphered Date	2009/09/15

THIS SHEET OF ENGINEERING DRAWING IS THE PROPRIETARY PROPERTY OF COMPAL ELECTRONICS, INC. AND CONTAINS CONFIDENTIAL AND TRADE SECRET INFORMATION. THIS SHEET MAY NOT BE TRANSFERED FROM THE CUSTODY OF THE COMPETENT DIVISION OF R&D DEPARTMENT EXCEPT AS AUTHORIZED BY COMPAL ELECTRONICS, INC. NEITHER THIS SHEET NOR THE INFORMATION IT CONTAINS MAY BE USED BY OR DISCLOSED TO ANY THIRD PARTY WITHOUT PRIOR WRITTEN CONSENT OF COMPAL ELECTRONICS, INC.

Compal Electronics, Inc.

Title: **USB & BT Connector & Acclerometer**

Size	Document Number	Rev
	LA-4951P	0.4

Date: Tuesday, July 28, 2009 | Sheet 26 of 48

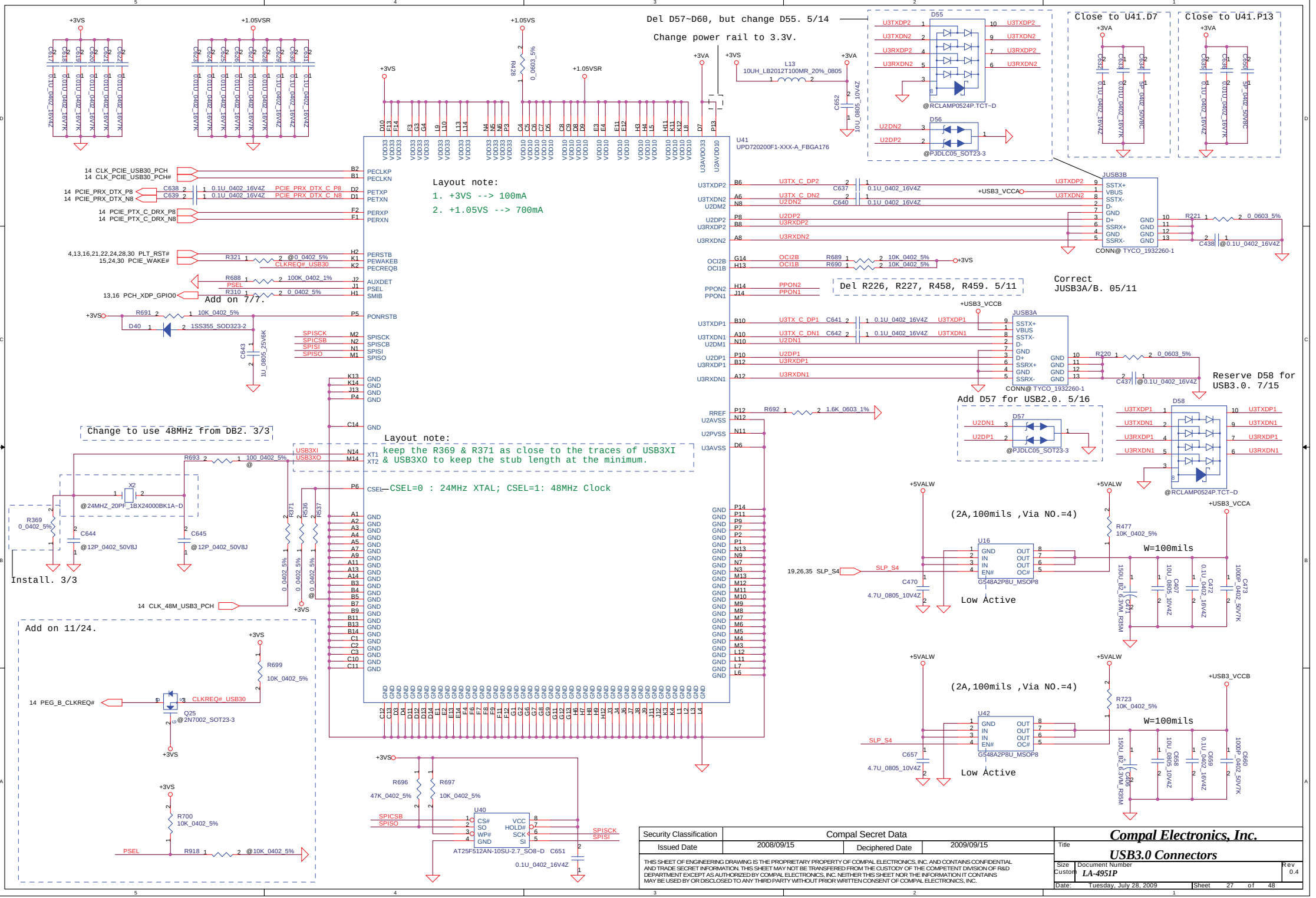
Del D57~D60, but change D55. 5/14
Change power rail to 3.3V.
Close to U41.D7
Close to U41.P13
U41
UPD720200F1-XXX-A_FBGA176
Layout note:
1. +3VS --> 100mA
2. +1.05VS --> 700mA
Del R226, R227, R458, R459. 5/11
Correct JUSB3A/B. 05/11
Reserve D58 for USB3.0. 7/15
Add D57 for USB2.0. 5/16
Add on 7/7.
Change to use 48MHz from DB2. 3/3
Layout note:
keep the R369 & R371 as close to the traces of USB3XI & USB3XO to keep the stub length at the minimum.
CSEL=0 : 24MHz XTAL; CSEL=1: 48MHz Clock
Install. 3/3
Add on 11/24.
(2A,100mils ,Via NO.=4)
W=100mils
Low Active
Security Classification
Compal Secret Data
Issued Date
2008/09/15
Deciphered Date
2009/09/15
Compal Electronics, Inc.
Title
USB3.0 Connectors
Size
Custom
Document Number
LA-4951P
Rev
0.4
Date:
Tuesday, July 28, 2009
Sheet
27
of
48

Finger printer

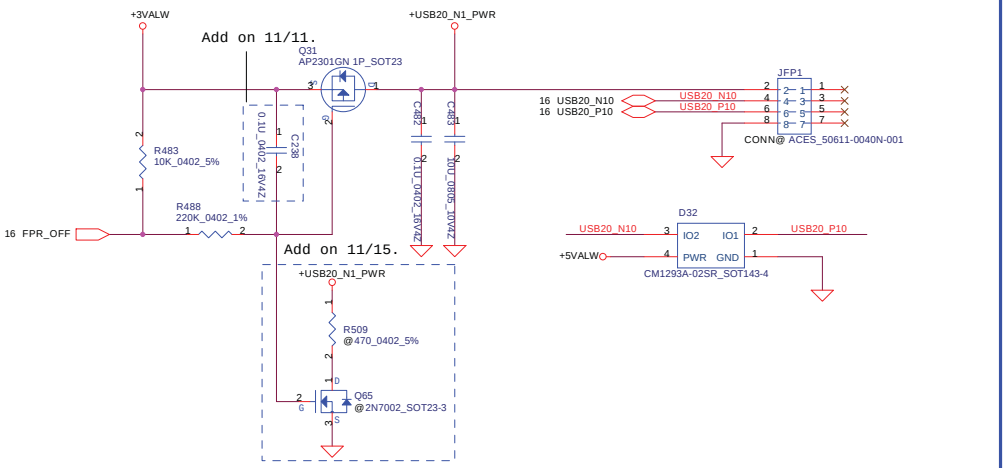

TPM1.2 on board

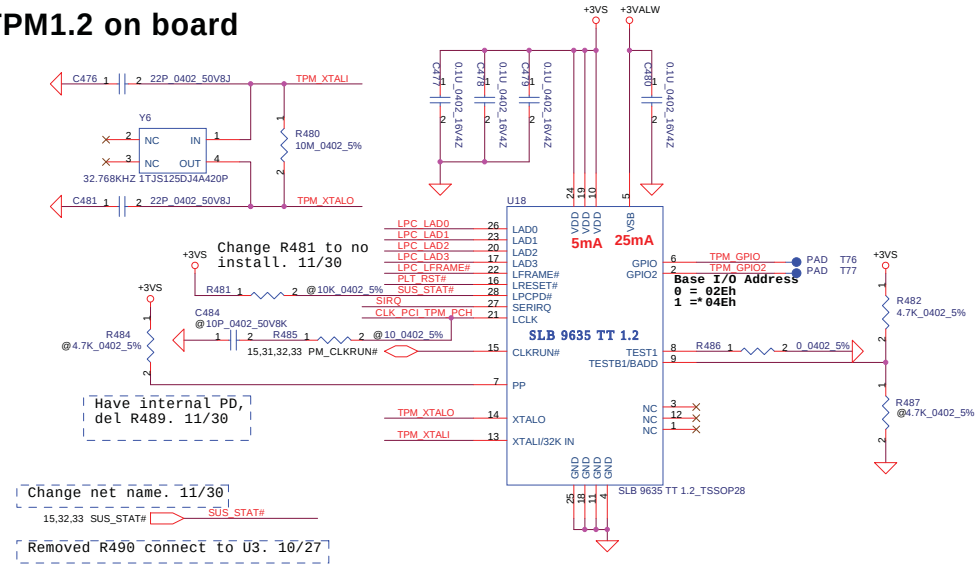

BIOS ROM(8MB)

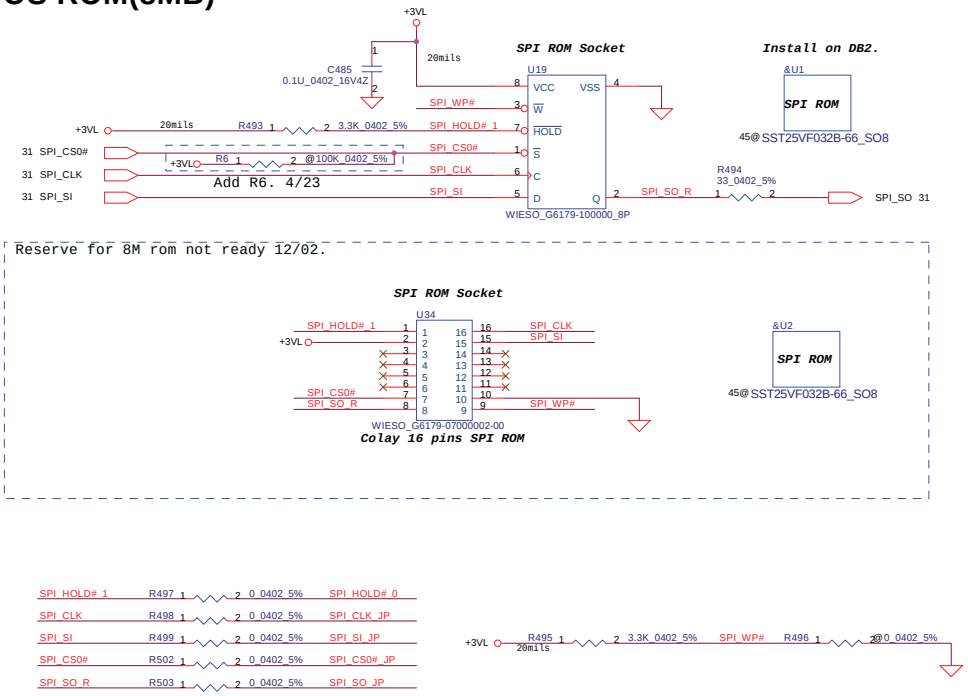

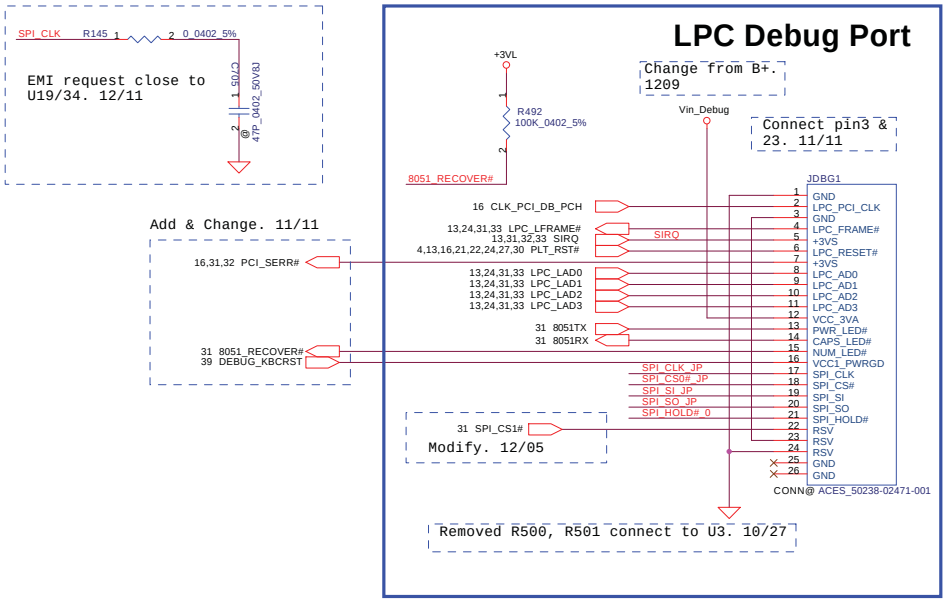

Security Classification	Compal Secret Data		
Issued Date	2008/09/15	Deciphered Date	2009/09/15

THIS SHEET OF ENGINEERING DRAWING IS THE PROPRIETARY PROPERTY OF COMPAL ELECTRONICS, INC. AND CONTAINS CONFIDENTIAL AND TRADE SECRET INFORMATION. THIS SHEET MAY NOT BE TRANSFERED FROM THE CUSTODY OF THE COMPETENT DIVISION OF R&D DEPARTMENT EXCEPT AS AUTHORIZED BY COMPAL ELECTRONICS, INC. NEITHER THIS SHEET NOR THE INFORMATION IT CONTAINS MAY BE USED BY OR DISCLOSED TO ANY THIRD PARTY WITHOUT PRIOR WRITTEN CONSENT OF COMPAL ELECTRONICS, INC.

Compal Electronics, Inc.

Title: **TCG/BIOS ROM/PS2/SW LPC DEBUG**

Size	Document Number	Rev
	LA-4951P	0.4

Date: Tuesday, July 28, 2009 | Sheet 28 of 48

DOCKING CONNECTOR (190 pins)

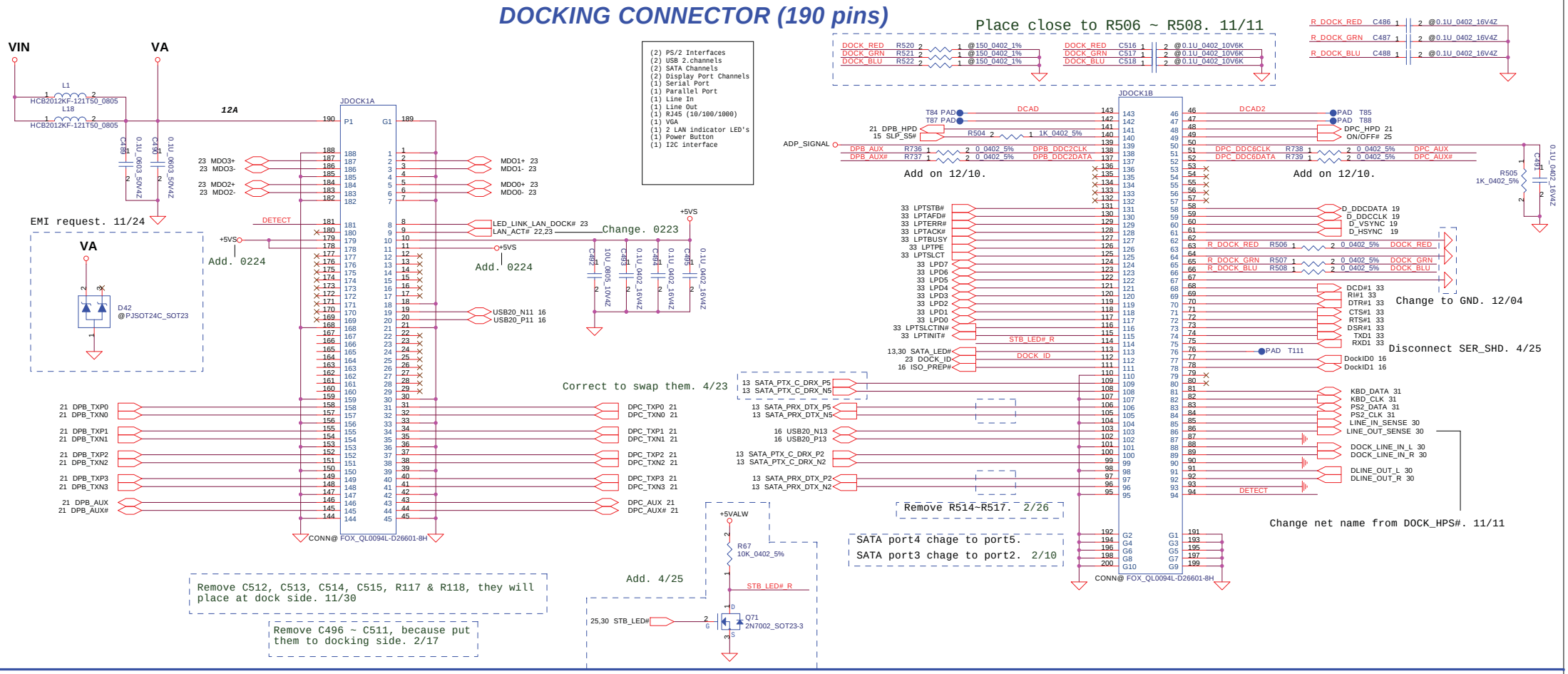

RGB Q-Switch

IN	NC<-->COM	NO<-->COM
L	ON	OFF
H	OFF	ON

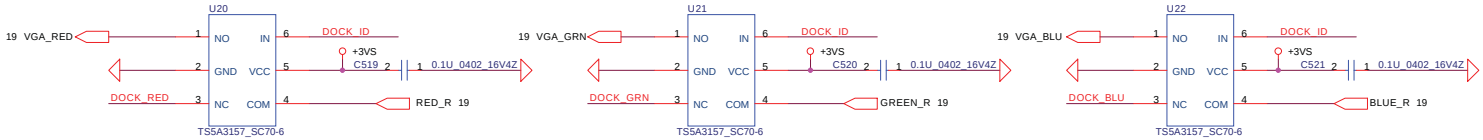

Security Classification	Compal Secret Data		
Issued Date	2008/09/15	Deciphered Date	2009/09/15

THIS SHEET OF ENGINEERING DRAWING IS THE PROPRIETARY PROPERTY OF COMPAL ELECTRONICS, INC. AND CONTAINS CONFIDENTIAL AND TRADE SECRET INFORMATION. THIS SHEET MAY NOT BE TRANSFERED FROM THE CUSTODY OF THE COMPETENT DIVISION OF R&D DEPARTMENT EXCEPT AS AUTHORIZED BY COMPAL ELECTRONICS, INC. NEITHER THIS SHEET NOR THE INFORMATION IT CONTAINS MAY BE USED BY OR DISCLOSED TO ANY THIRD PARTY WITHOUT PRIOR WRITTEN CONSENT OF COMPAL ELECTRONICS, INC.

Compal Electronics, Inc.

Title: **DOCK CONN**

Size: Custom | Document Number: LA-4951P | Rev: 0.4

Date: Tuesday, July 28, 2009 | Sheet 29 of 48

Audio/Express/LEDs/Card Read Connector

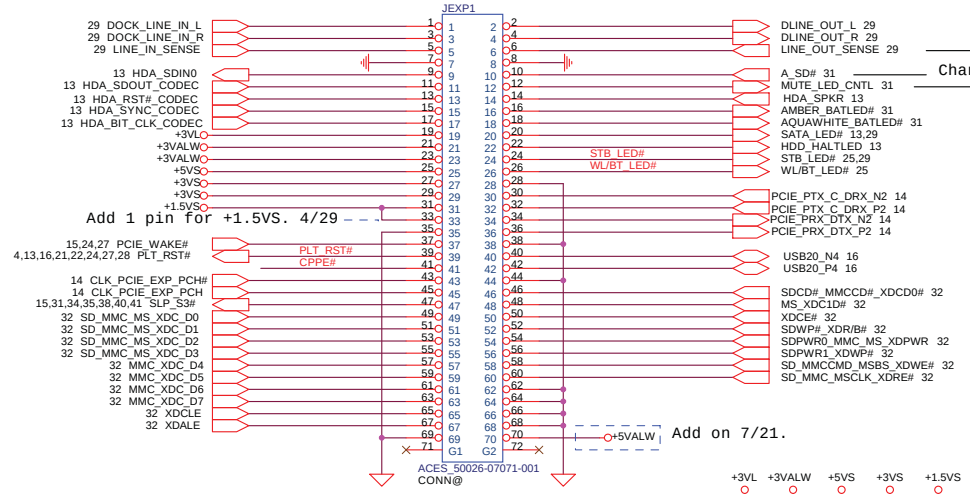

Change net name from DOCK_HPS#. 11/11

Change net name from A_SD. 5/04

Change net name from EAPD. 5/04

Add 1 pin for +1.5VS. 4/29

Add on 7/21.

Power Button Connector

Removed Power button JPB1 & C522, combin with JSWITCH1. 11/10

Change R734 & R735 to NI. 02/06

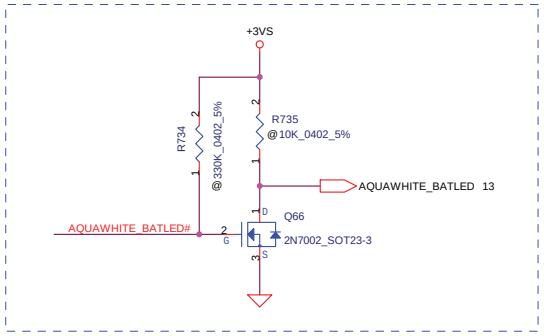

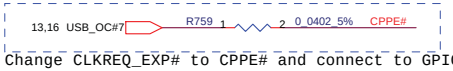

Change CLKREQ_EXP# to CPPE# and connect to GPIO14. 7/21

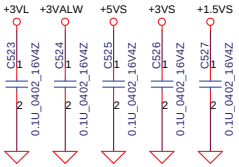

Add for debuging. 3/3

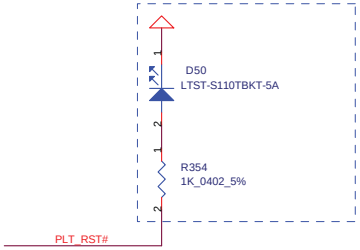

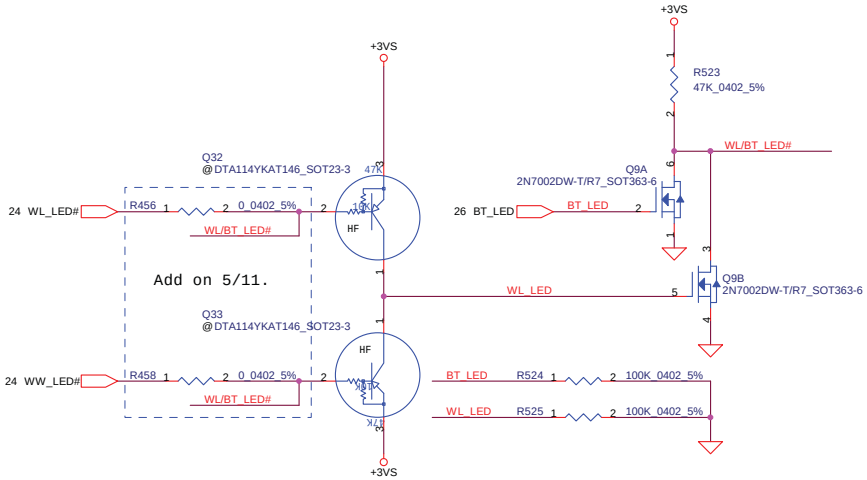

Security Classification	Compal Secret Data		
Issued Date	2008/09/01	Deciphered Date	2010/09/01

THIS SHEET OF ENGINEERING DRAWING IS THE PROPRIETARY PROPERTY OF COMPAL ELECTRONICS, INC. AND CONTAINS CONFIDENTIAL AND TRADE SECRET INFORMATION. THIS SHEET MAY NOT BE TRANSFERED FROM THE CUSTODY OF THE COMPETENT DIVISION OF R&D DEPARTMENT EXCEPT AS AUTHORIZED BY COMPAL ELECTRONICS, INC. NEITHER THIS SHEET NOR THE INFORMATION IT CONTAINS MAY BE USED BY OR DISCLOSED TO ANY THIRD PARTY WITHOUT PRIOR WRITTEN CONSENT OF COMPAL ELECTRONICS, INC.

Compal Electronics, Inc.

Title: **CR&LEDS&PW&Audio&Exp Conn**

Size: Custom | Document Number: *LA-4951P* | Rev: 0.4

Date: Tuesday, July 28, 2009 | Sheet 30 of 48

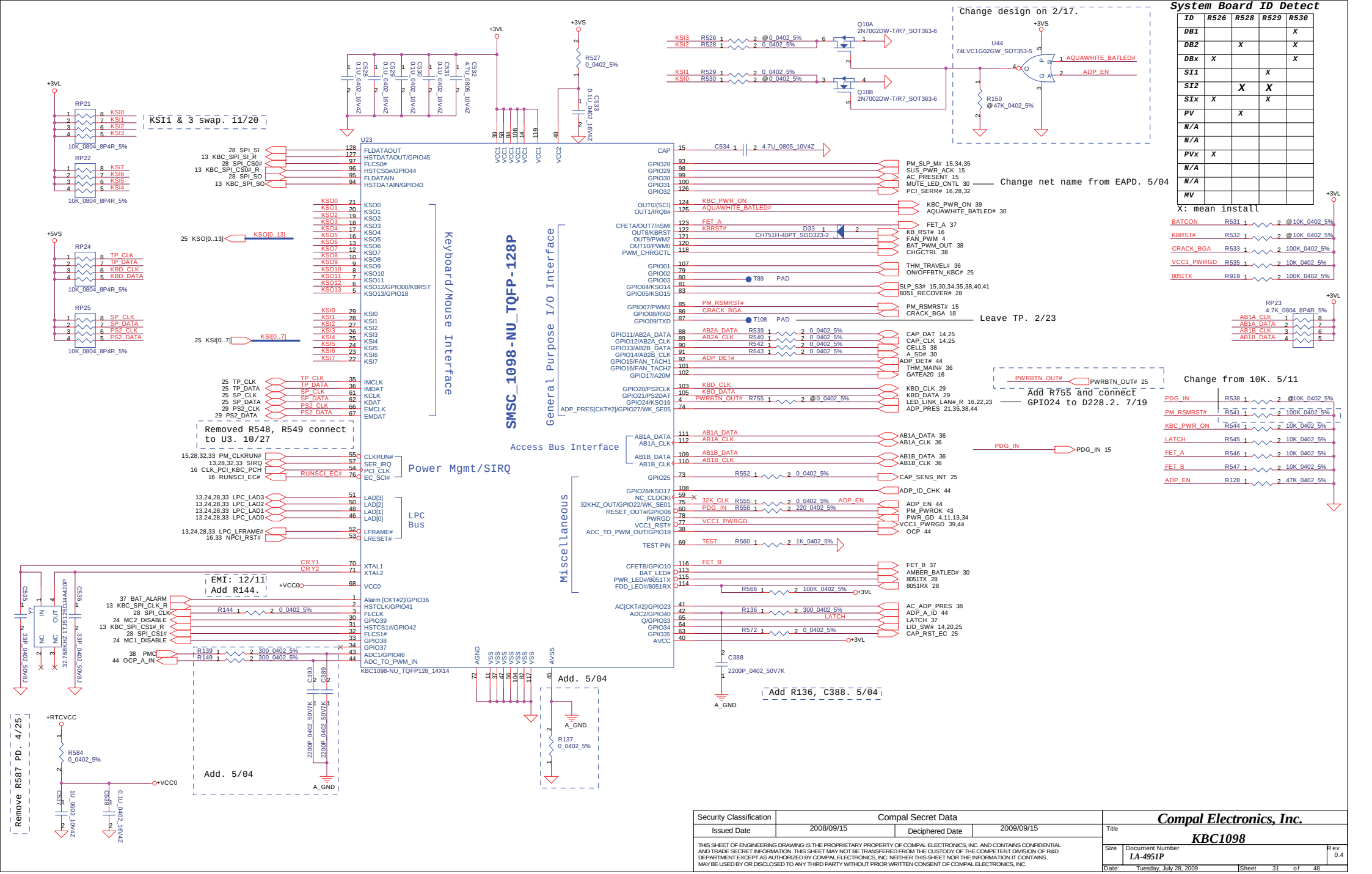
System Board ID Detect
ID | R526 | R528 | R529 | R530
DB1 | | | | X
DB2 | | X | | X
DBx | X | | | X
SI1 | | | X | |
SI2 | | X | X | |
SIx | X | | X | |
PV | | X | | |
N/A | | | | |
N/A | | | | |
PVx | X | | | |
N/A | | | | |
N/A | | | | |
MV | | | | |
X: mean install
Change design on 2/17.
KSI1 & 3 swap. 11/20
Change net name from EAPD. 5/04
Leave TP. 2/23
Add R755 and connect GPIO24 to D228.2. 7/19
Change from 10K. 5/11
Removed R548, R549 connect to U3. 10/27
EMI: 12/11 Add R144.
Add. 5/04
Add R136, C388. 5/04
Remove R587 PD. 4/25
SMSC_1098-NU_TQFP-128P
Keyboard/Mouse Interface
General Purpose I/O Interface
Access Bus Interface
Power Mgmt/SIRQ
LPC Bus
Miscellaneous
KBC1098-NU_TQFP128_14X14
Security Classification
Compal Secret Data
Issued Date
2008/09/15
Deciphered Date
2009/09/15
Compal Electronics, Inc.
Title
KBC1098
Size
Document Number
LA-4951P
Rev
0.4
Date: Tuesday, July 28, 2009
Sheet 31 of 48

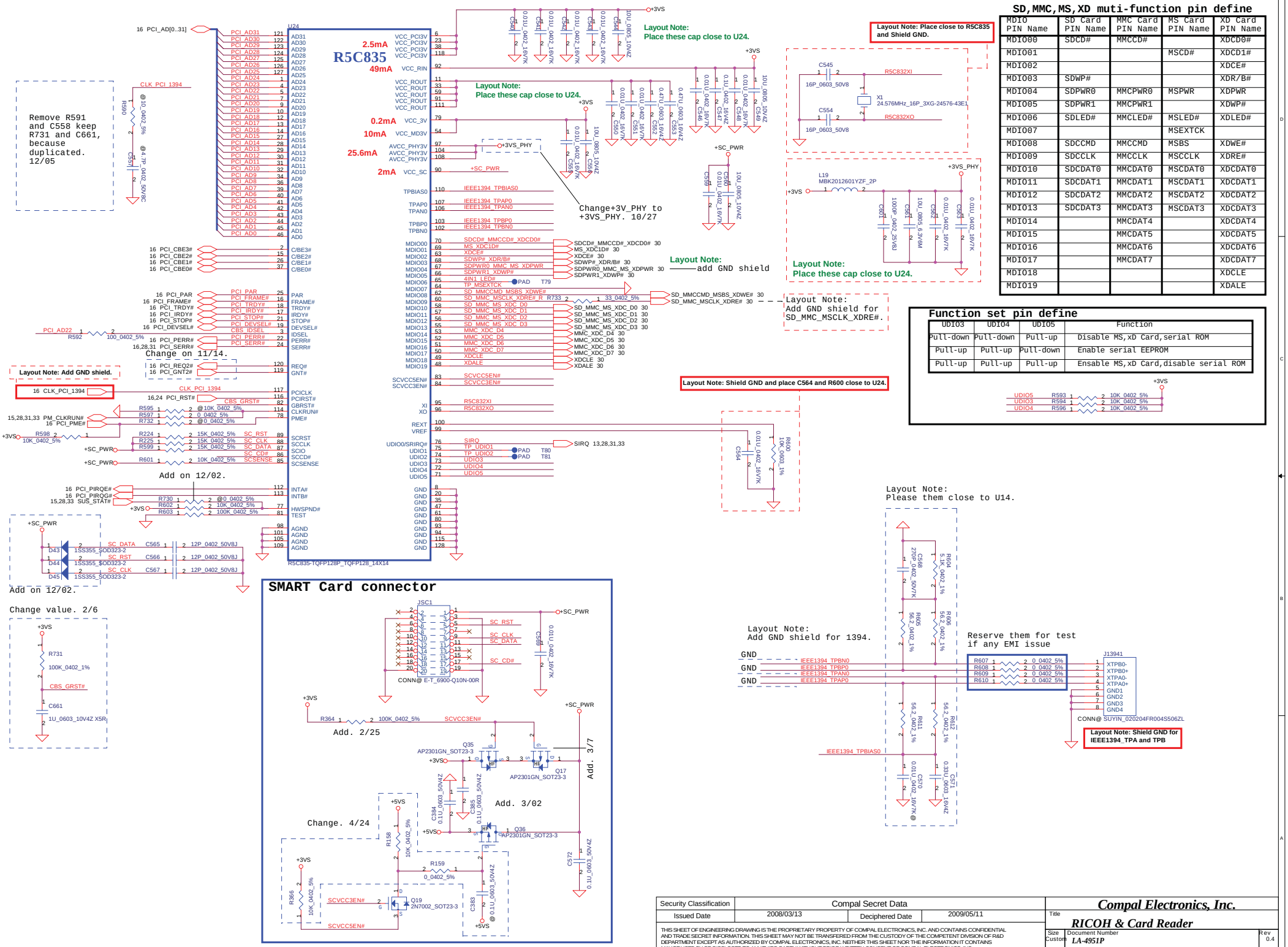

SD,MMC,MS,XD muti-function pin define

MDIO PIN Name	SD Card PIN Name	MMC Card PIN Name	MS Card PIN Name	XD Card PIN Name
MDIO00	SDCD#	MMCCD#		XDCD0#
MDIO01			MSCD#	XDCD1#
MDIO02				XDCE#
MDIO03	SDWP#			XDR/B#
MDIO04	SDPWR0	MMCPWR0	MSPWR	XDPWR
MDIO05	SDPWR1	MMCPWR1		XDWP#
MDIO06	SDLED#	MMCLED#	MSLED#	XDLED#
MDIO07			MSEXTCK	
MDIO08	SDCCMD	MMCCMD	MSBS	XDWE#
MDIO09	SDCCLK	MMCCLK	MSCCLK	XDRE#
MDIO10	SDCDAT0	MMCDAT0	MSCDAT0	XDCDAT0
MDIO11	SDCDAT1	MMCDAT1	MSCDAT1	XDCDAT1
MDIO12	SDCDAT2	MMCDAT2	MSCDAT2	XDCDAT2
MDIO13	SDCDAT3	MMCDAT3	MSCDAT3	XDCDAT3
MDIO14		MMCDAT4		XDCDAT4
MDIO15		MMCDAT5		XDCDAT5
MDIO16		MMCDAT6		XDCDAT6
MDIO17		MMCDAT7		XDCDAT7
MDIO18				XDCLE
MDIO19				XDALE

Function set pin define

UDIO3	UDIO4	UDIO5	Function
Pull-down	Pull-down	Pull-up	Disable MS,xD Card,serial ROM
Pull-up	Pull-up	Pull-down	Enable serial EEPROM
Pull-up	Pull-up	Pull-up	Ensable MS,xD Card,disable serial ROM

Security Classification	Compal Secret Data		
Issued Date	2008/03/13	Deciphered Date	2009/05/11

THIS SHEET OF ENGINEERING DRAWING IS THE PROPRIETARY PROPERTY OF COMPAL ELECTRONICS, INC. AND CONTAINS CONFIDENTIAL AND TRADE SECRET INFORMATION. THIS SHEET MAY NOT BE TRANSFERED FROM THE CUSTODY OF THE COMPETENT DIVISION OF R&D DEPARTMENT EXCEPT AS AUTHORIZED BY COMPAL ELECTRONICS, INC. NEITHER THIS SHEET NOR THE INFORMATION IT CONTAINS MAY BE USED BY OR DISCLOSED TO ANY THIRD PARTY WITHOUT PRIOR WRITTEN CONSENT OF COMPAL ELECTRONICS, INC.

Compal Electronics, Inc.

Title: **RICOH & Card Reader**

Size: Custom | Document Number: LA-4951P | Rev: 0.4

Date: Tuesday, July 28, 2009 | Sheet 32 of 48

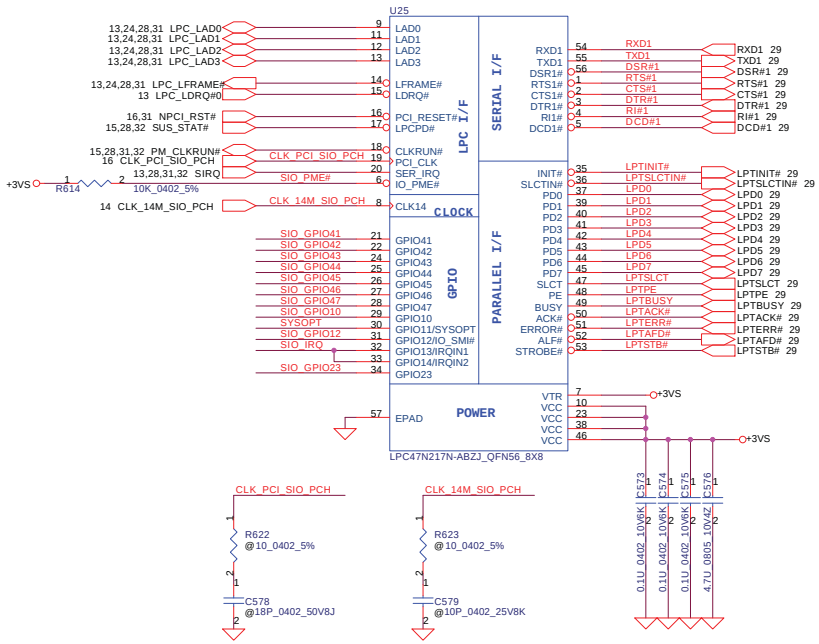

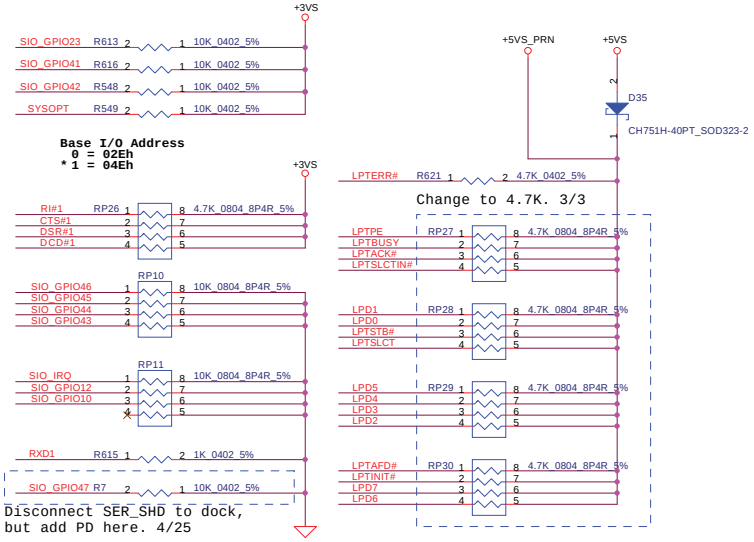

Security Classification	Compal Secret Data		
Issued Date	2008/09/15	Deciphered Date	2009/09/15

THIS SHEET OF ENGINEERING DRAWING IS THE PROPRIETARY PROPERTY OF COMPAL ELECTRONICS, INC. AND CONTAINS CONFIDENTIAL AND TRADE SECRET INFORMATION. THIS SHEET MAY NOT BE TRANSFERED FROM THE CUSTODY OF THE COMPETENT DIVISION OF R&D DEPARTMENT EXCEPT AS AUTHORIZED BY COMPAL ELECTRONICS, INC. NEITHER THIS SHEET NOR THE INFORMATION IT CONTAINS MAY BE USED BY OR DISCLOSED TO ANY THIRD PARTY WITHOUT PRIOR WRITTEN CONSENT OF COMPAL ELECTRONICS, INC.

Compal Electronics, Inc.

Title: **Super I/O LPC47N217**

Size: Custom | Document Number: LA-4951P | Rev: 0.4

Date: Tuesday, July 28, 2009 | Sheet 33 of 48

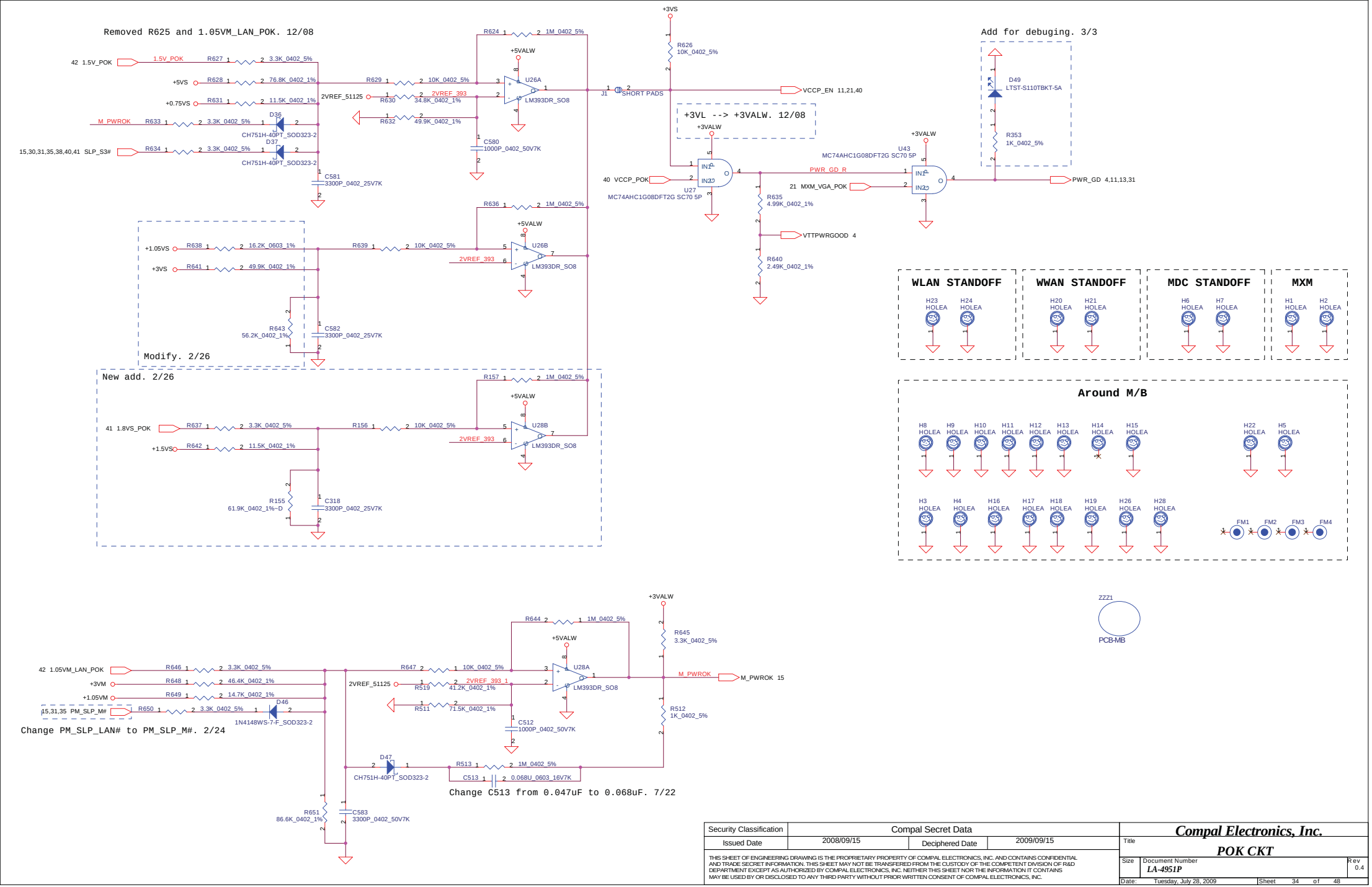

Security Classification	Compal Secret Data		
Issued Date	2008/09/15	Deciphered Date	2009/09/15

THIS SHEET OF ENGINEERING DRAWING IS THE PROPRIETARY PROPERTY OF COMPAL ELECTRONICS, INC. AND CONTAINS CONFIDENTIAL AND TRADE SECRET INFORMATION. THIS SHEET MAY NOT BE TRANSFERED FROM THE CUSTODY OF THE COMPETENT DIVISION OF R&D DEPARTMENT EXCEPT AS AUTHORIZED BY COMPAL ELECTRONICS, INC. NEITHER THIS SHEET NOR THE INFORMATION IT CONTAINS MAY BE USED BY OR DISCLOSED TO ANY THIRD PARTY WITHOUT PRIOR WRITTEN CONSENT OF COMPAL ELECTRONICS, INC.

Compal Electronics, Inc.

Title: **POK CKT**

Size | Document Number: *LA-4951P* | Rev: 0.4

Date: Tuesday, July 28, 2009 | Sheet 34 of 48

+3VALW to +3VS Transfer

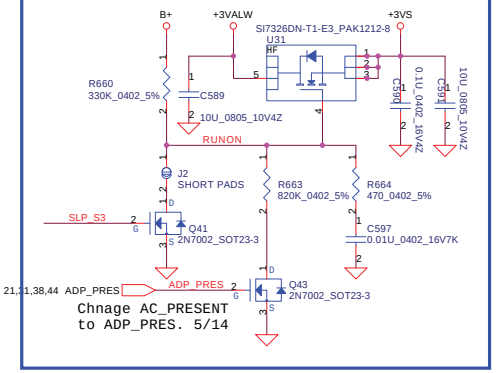

Chnage AC_PRESENT to ADP_PRES. 5/14

+1.05VM_LAN to +1.05VM Transfer

Change from +1.05VMP_LAN to +1.05V_LAN_M. 11/11

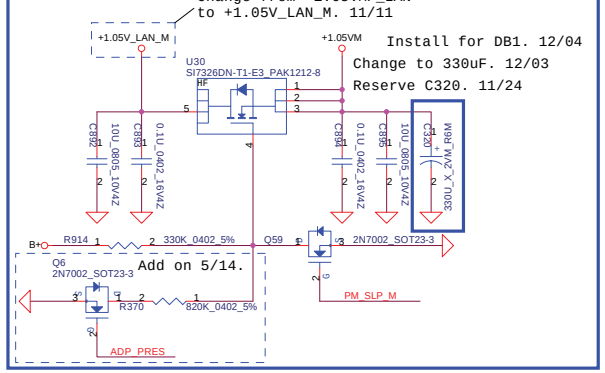

Install for DB1. 12/04
Change to 330uF. 12/03
Reserve C320. 11/24

Add on 5/14.

+1.05VM to +1.05VS Transfer

Change from +1.05VM_LAN. 12/09

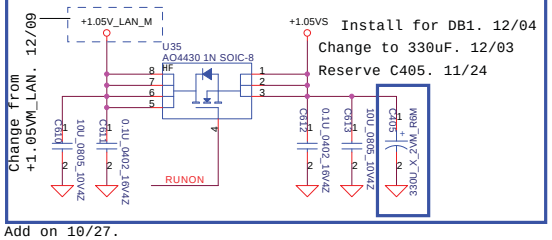

Install for DB1. 12/04
Change to 330uF. 12/03
Reserve C405. 11/24

Add on 10/27.

+1.5V to +1.5VS Transfer

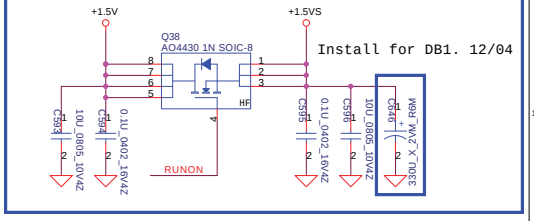

Install for DB1. 12/04

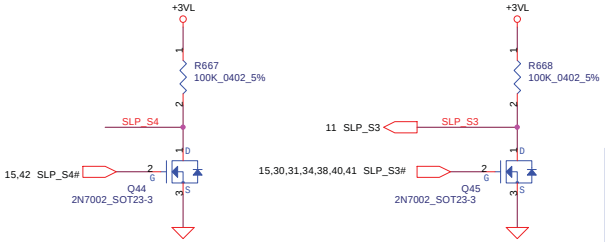

Modify on 10/28.

+5VALW to +5VS Transfer

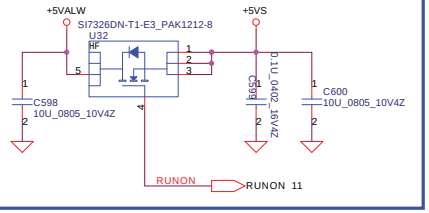

Q39 be remove. 7/22

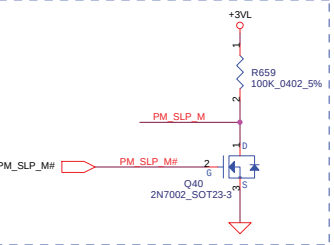

+3VALW to +3VM Transfer

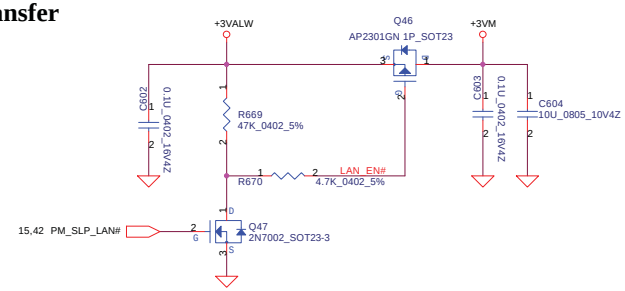

Discharge circuit-1

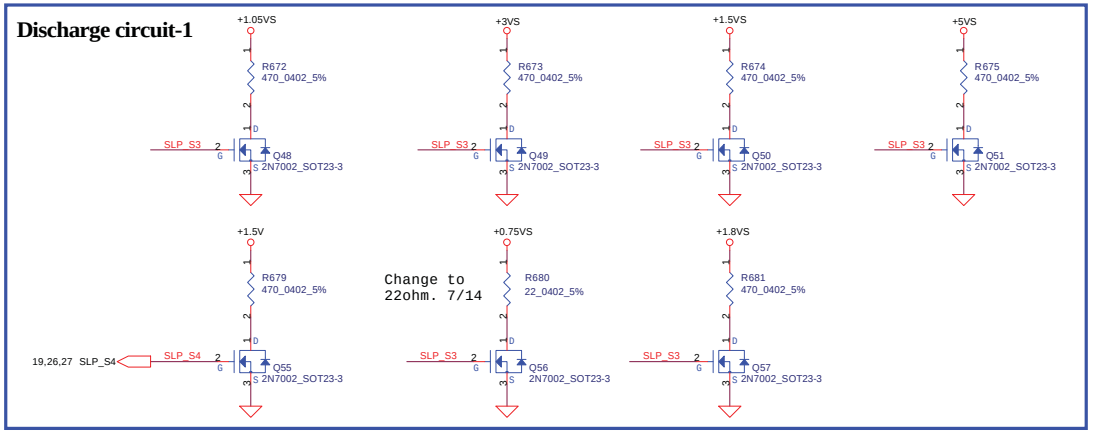

Change to 22ohm. 7/14

SYS. STATE	PM_SLP_M#	LAN_WOL_EN	+3VM_WOL	+3VM
M-off / No WOL	0	0	0V	0V
M-off / WOL	0	1	3.3V	0V
M1 (ME on)	1	0	3.3V	3.3V
M1 (ME on)	1	1	3.3V	3.3V

Discharge circuit-2 for V-M

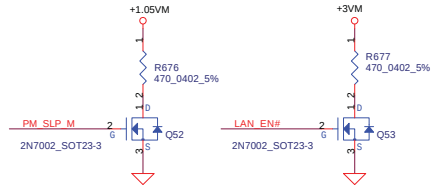

Change LAN_EN# to PM_SLP_M. 7/22

Security Classification	Compal Secret Data		
Issued Date	2008/09/15	Deciphered Date	2009/09/15

THIS SHEET OF ENGINEERING DRAWING IS THE PROPRIETARY PROPERTY OF COMPAL ELECTRONICS, INC. AND CONTAINS CONFIDENTIAL AND TRADE SECRET INFORMATION. THIS SHEET MAY NOT BE TRANSFERED FROM THE CUSTODY OF THE COMPETENT DIVISION OF R&D DEPARTMENT EXCEPT AS AUTHORIZED BY COMPAL ELECTRONICS, INC. NEITHER THIS SHEET NOR THE INFORMATION IT CONTAINS MAY BE USED BY OR DISCLOSED TO ANY THIRD PARTY WITHOUT PRIOR WRITTEN CONSENT OF COMPAL ELECTRONICS, INC.

Compal Electronics, Inc.

Title: **DC/DC Circuits**

Size: | Document Number: *LA-4951P* | Rev: 0.4

Date: Tuesday, July 28, 2009 | Sheet 35 of 48

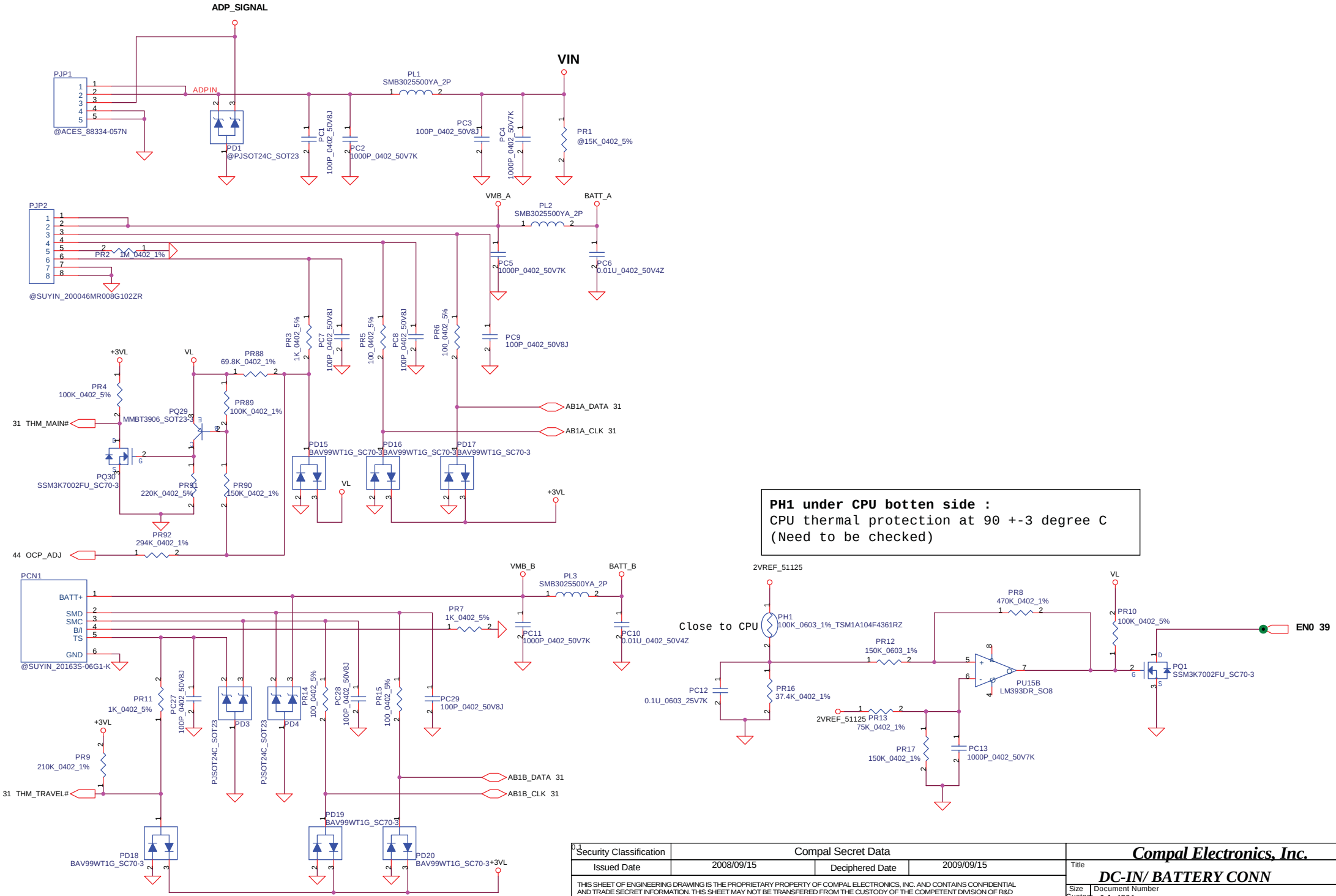

PH1 under CPU botten side :
CPU thermal protection at 90 +-3 degree C
(Need to be checked)

Security Classification	Compal Secret Data		
Issued Date	2008/09/15	Deciphered Date	2009/09/15

THIS SHEET OF ENGINEERING DRAWING IS THE PROPRIETARY PROPERTY OF COMPAL ELECTRONICS, INC. AND CONTAINS CONFIDENTIAL AND TRADE SECRET INFORMATION. THIS SHEET MAY NOT BE TRANSFERED FROM THE CUSTODY OF THE COMPETENT DIVISION OF R&D DEPARTMENT EXCEPT AS AUTHORIZED BY COMPAL ELECTRONICS, INC. NEITHER THIS SHEET NOR THE INFORMATION IT CONTAINS MAY BE USED BY OR DISCLOSED TO ANY THIRD PARTY WITHOUT PRIOR WRITTEN CONSENT OF COMPAL ELECTRONICS, INC.

Compal Electronics, Inc.

Title: **DC-IN/ BATTERY CONN**

Size: Custom | Document Number: LA-4891 | Rev: 0.1

Date: Tuesday, July 28, 2009 | Sheet 36 of 48

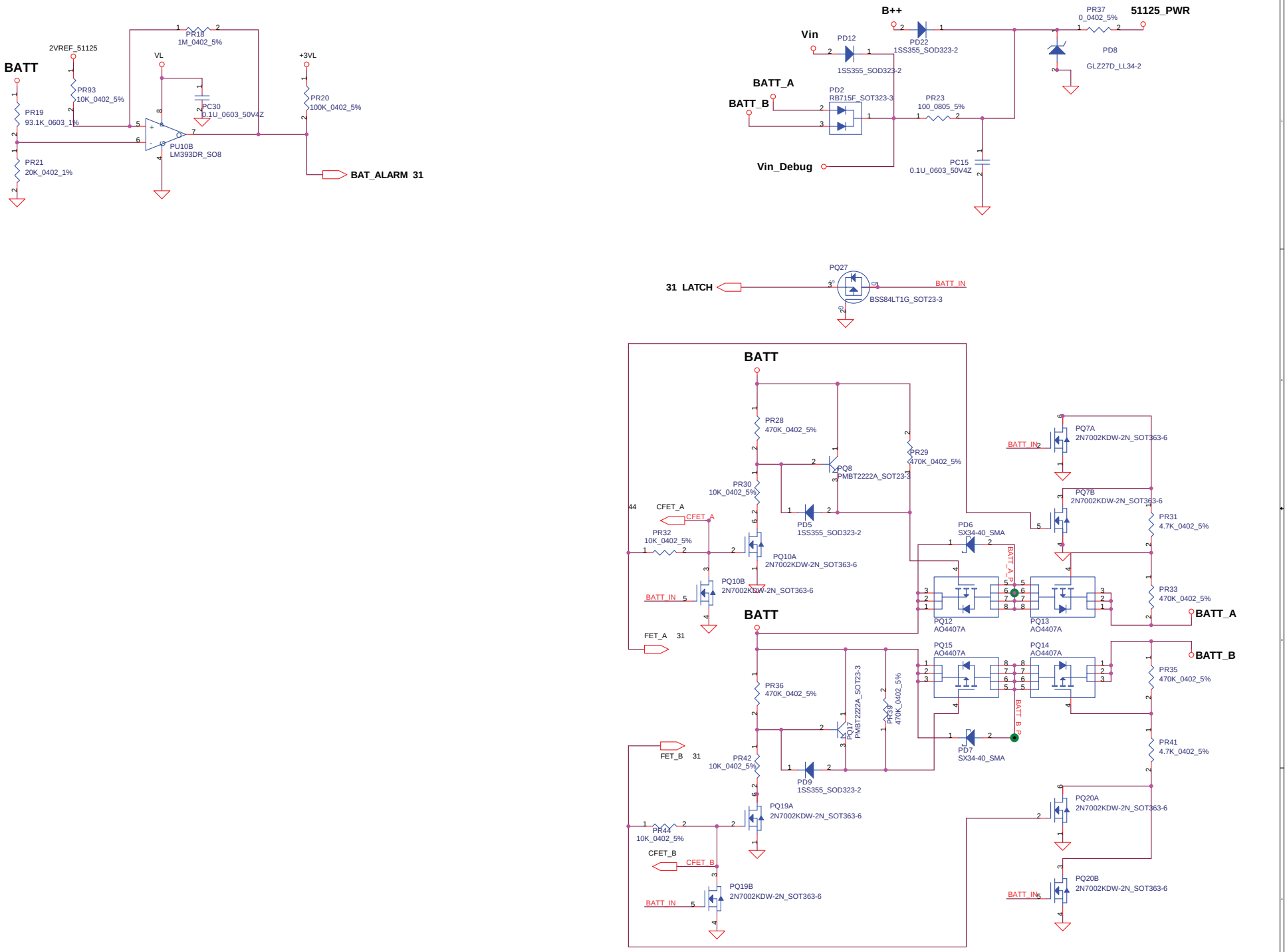

Security Classification	Compal Secret Data		
Issued Date	2008/09/15	Deciphered Date	2009/09/15

THIS SHEET OF ENGINEERING DRAWING IS THE PROPRIETARY PROPERTY OF COMPAL ELECTRONICS, INC. AND CONTAINS CONFIDENTIAL AND TRADE SECRET INFORMATION. THIS SHEET MAY NOT BE TRANSFERED FROM THE CUSTODY OF THE COMPETENT DIVISION OF R&D DEPARTMENT EXCEPT AS AUTHORIZED BY COMPAL ELECTRONICS, INC. NEITHER THIS SHEET NOR THE INFORMATION IT CONTAINS MAY BE USED BY OR DISCLOSED TO ANY THIRD PARTY WITHOUT PRIOR WRITTEN CONSENT OF COMPAL ELECTRONICS, INC.

Compal Electronics, Inc.

Title: **Battery selector**

Size: Custom | Document Number: *LA-4891* | Rev

Date: Tuesday, July 28, 2009 | Sheet 37 of 48

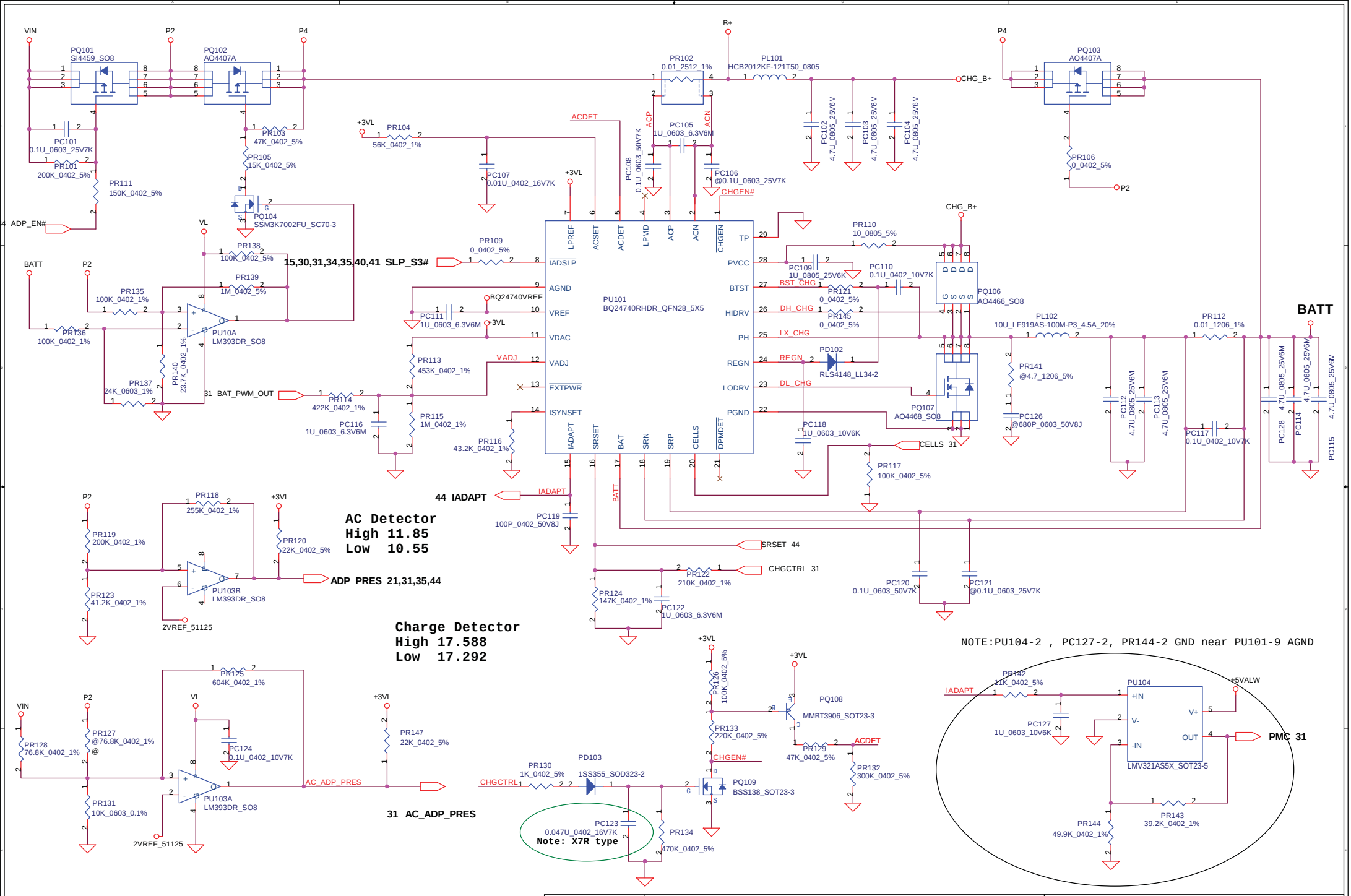

Security Classification	Compal Secret Data		
Issued Date	2008/09/15	Deciphered Date	2009/09/15

THIS SHEET OF ENGINEERING DRAWING IS THE PROPRIETARY PROPERTY OF COMPAL ELECTRONICS, INC. AND CONTAINS CONFIDENTIAL AND TRADE SECRET INFORMATION. THIS SHEET MAY NOT BE TRANSFERED FROM THE CUSTODY OF THE COMPETENT DIVISION OF R&D DEPARTMENT EXCEPT AS AUTHORIZED BY COMPAL ELECTRONICS, INC. NEITHER THIS SHEET NOR THE INFORMATION IT CONTAINS MAY BE USED BY OR DISCLOSED TO ANY THIRD PARTY WITHOUT PRIOR WRITTEN CONSENT OF COMPAL ELECTRONICS, INC.

Compal Electronics, Inc.

Title: **Charger**

Size: | Document Number: **LA-4891** | Rev: 0.1

Date: Tuesday, July 28, 2009 | Sheet 38 of 48

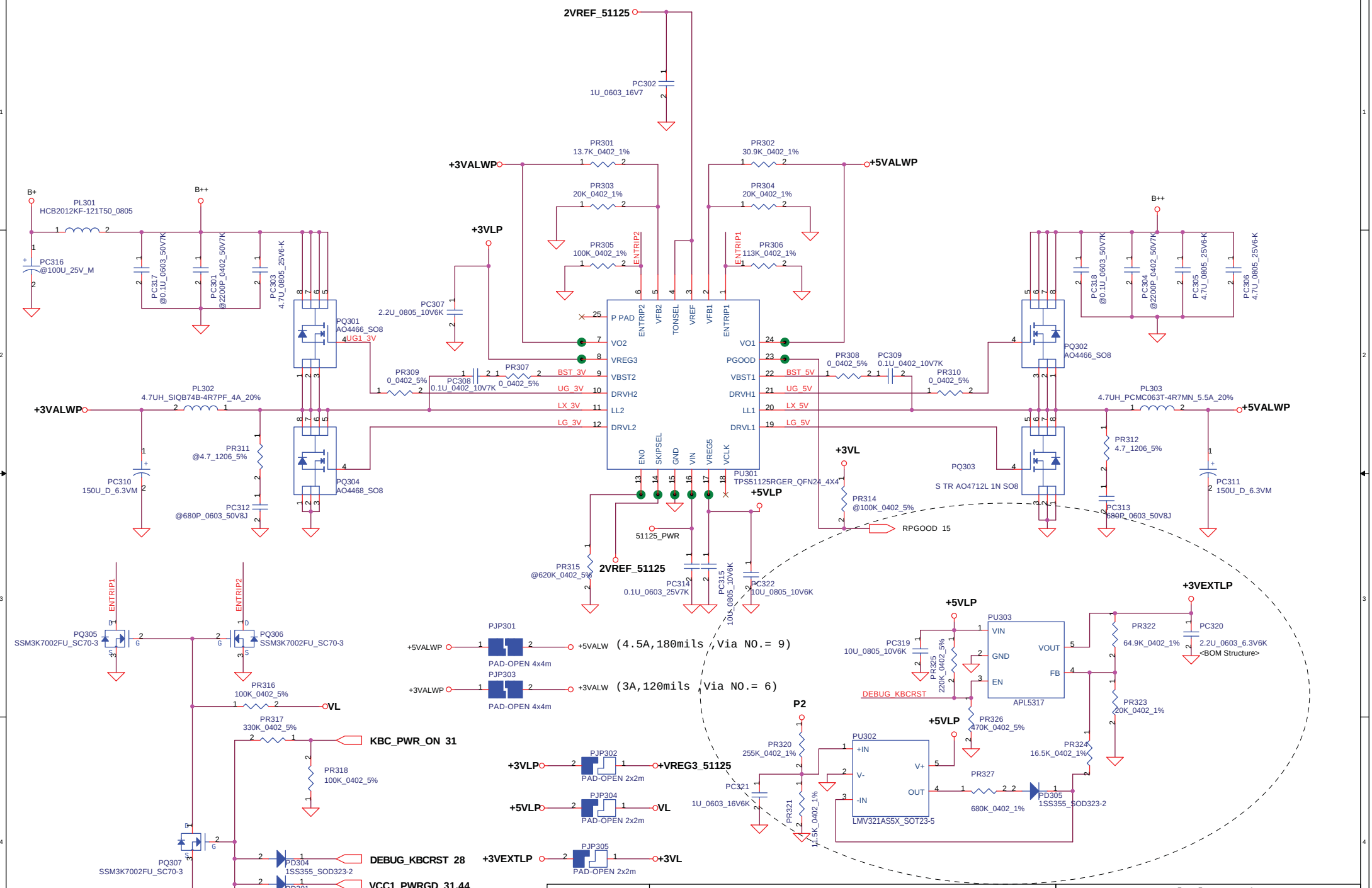

Security Classification	Compal Secret Data		
Issued Date	2008/09/15	Deciphered Date	2009/09/15

THIS SHEET OF ENGINEERING DRAWING IS THE PROPRIETARY PROPERTY OF COMPAL ELECTRONICS, INC. AND CONTAINS CONFIDENTIAL AND TRADE SECRET INFORMATION. THIS SHEET MAY NOT BE TRANSFERED FROM THE CUSTODY OF THE COMPETENT DIVISION OF R&D DEPARTMENT EXCEPT AS AUTHORIZED BY COMPAL ELECTRONICS, INC. NEITHER THIS SHEET NOR THE INFORMATION IT CONTAINS MAY BE USED BY OR DISCLOSED TO ANY THIRD PARTY WITHOUT PRIOR WRITTEN CONSENT OF COMPAL ELECTRONICS, INC.

Compal Electronics, Inc.

Title: **3.3VALWP/5VALWP**

Size: Custom | Document Number: LA-4961P | Rev: 0.1

Date: Tuesday, July 28, 2009 | Sheet 39 of 48

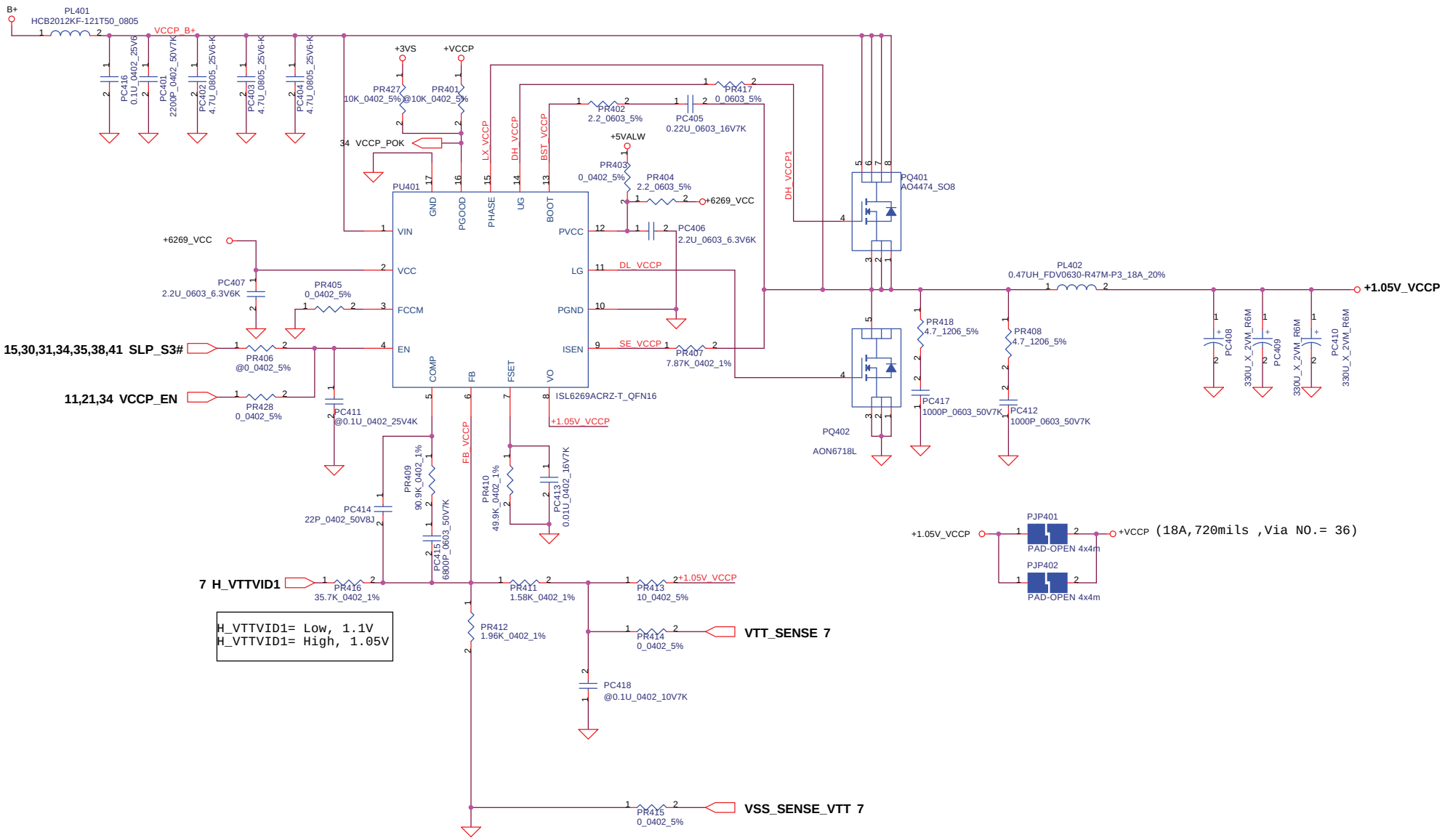

Security Classification	Compal Secret Data		
Issued Date	2008/09/15	Deciphered Date	2009/09/15

THIS SHEET OF ENGINEERING DRAWING IS THE PROPRIETARY PROPERTY OF COMPAL ELECTRONICS, INC. AND CONTAINS CONFIDENTIAL AND TRADE SECRET INFORMATION. THIS SHEET MAY NOT BE TRANSFERED FROM THE CUSTODY OF THE COMPETENT DIVISION OF R&D DEPARTMENT EXCEPT AS AUTHORIZED BY COMPAL ELECTRONICS, INC. NEITHER THIS SHEET NOR THE INFORMATION IT CONTAINS MAY BE USED BY OR DISCLOSED TO ANY THIRD PARTY WITHOUT PRIOR WRITTEN CONSENT OF COMPAL ELECTRONICS, INC.

Compal Electronics, Inc.

Title: **1.05V_VCCP**

Size | Document Number: *LA-4891* | Rev: 0.1

Date: Tuesday, July 28, 2009 | Sheet 40 of 48

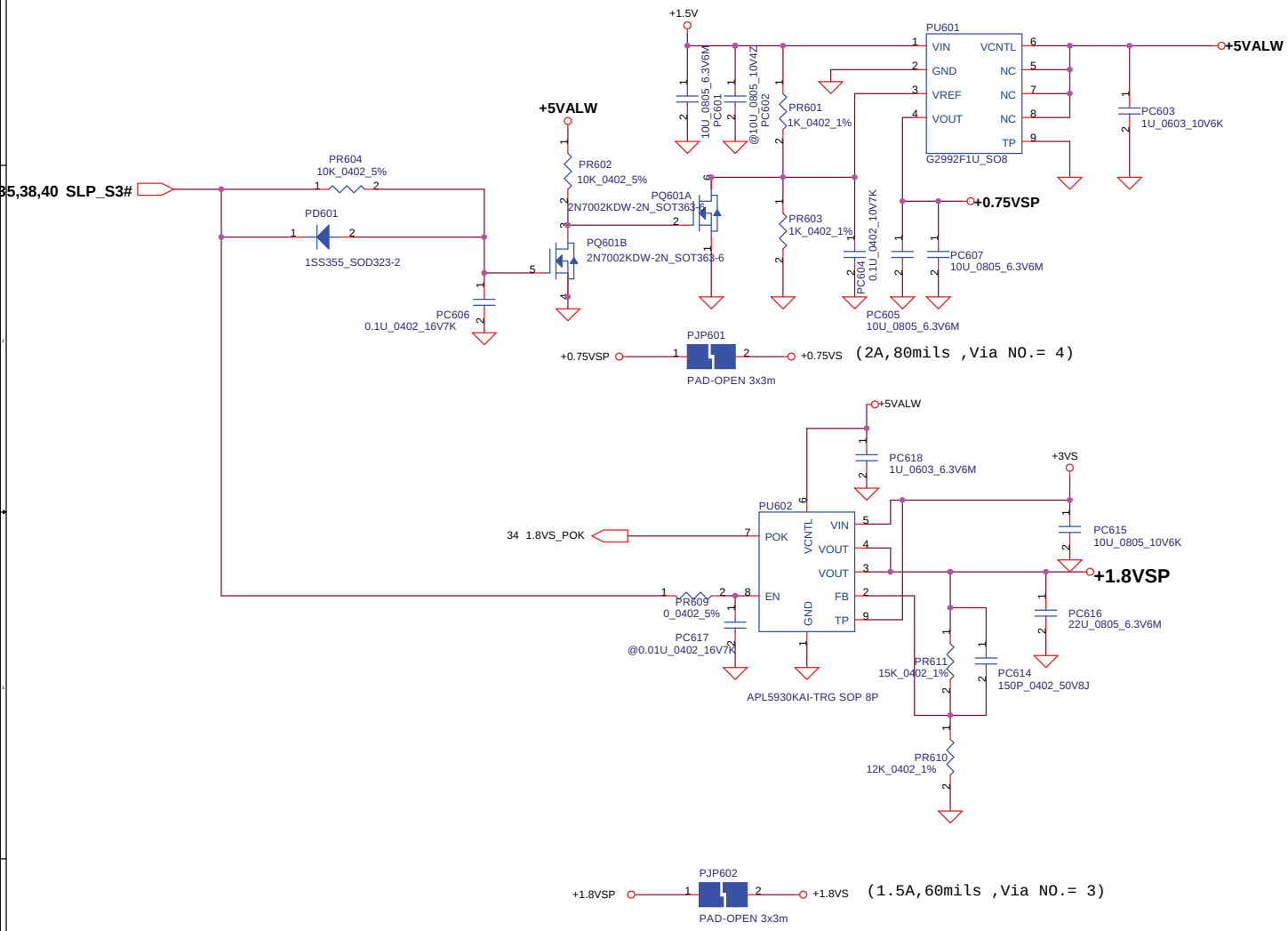

Security Classification	Compal Secret Data		
Issued Date	2008/09/15	Deciphered Date	2009/09/15

THIS SHEET OF ENGINEERING DRAWING IS THE PROPRIETARY PROPERTY OF COMPAL ELECTRONICS, INC. AND CONTAINS CONFIDENTIAL AND TRADE SECRET INFORMATION. THIS SHEET MAY NOT BE TRANSFERED FROM THE CUSTODY OF THE COMPETENT DIVISION OF R&D DEPARTMENT EXCEPT AS AUTHORIZED BY COMPAL ELECTRONICS, INC. NEITHER THIS SHEET NOR THE INFORMATION IT CONTAINS MAY BE USED BY OR DISCLOSED TO ANY THIRD PARTY WITHOUT PRIOR WRITTEN CONSENT OF COMPAL ELECTRONICS, INC.

Compal Electronics, Inc.

Title: **0.75VSP/PCIE/1.8VSP**

Size: | Document Number: **LA-4891** | Rev: 0.1

Date: Tuesday, July 28, 2009 | Sheet 41 of 48

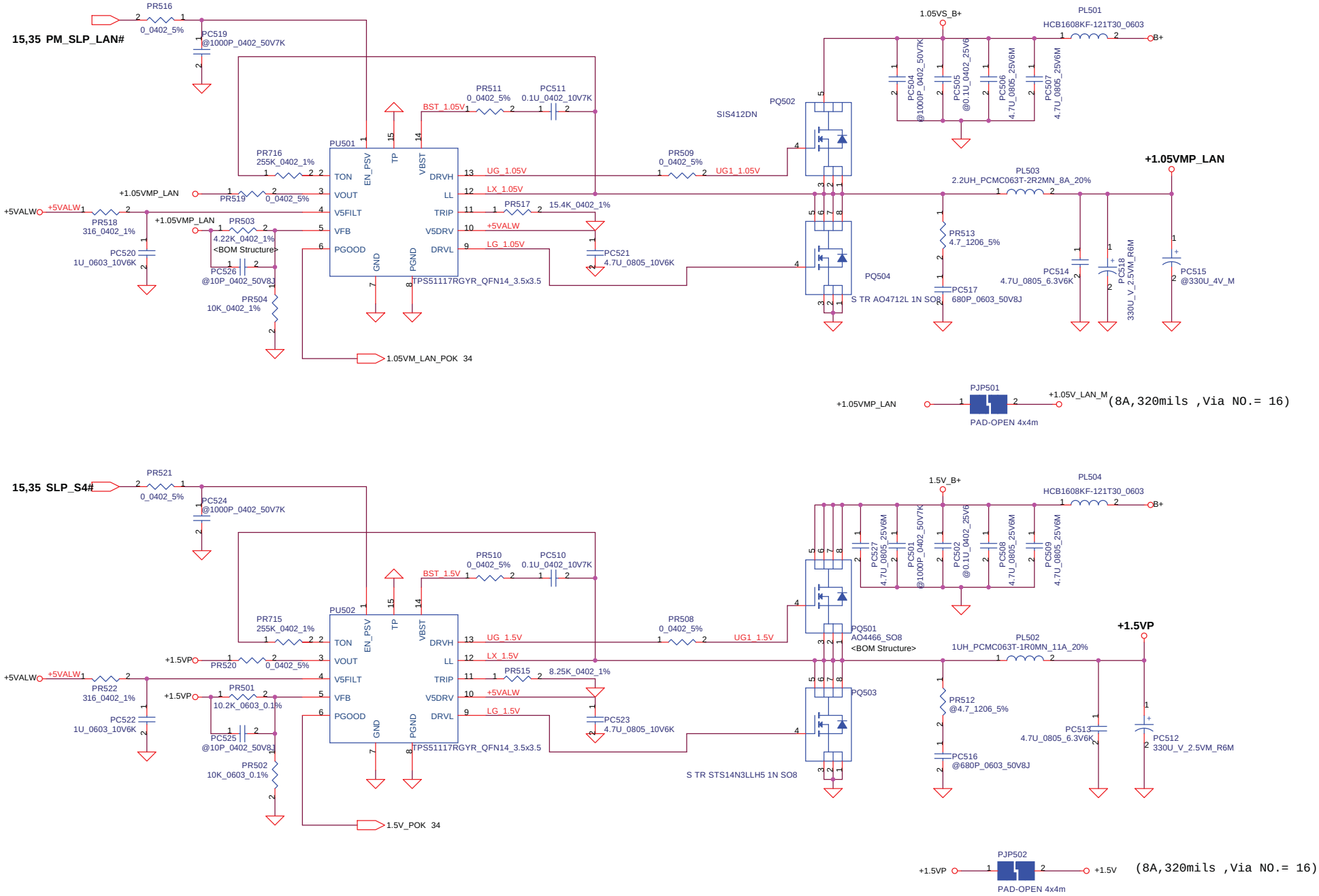

Security Classification	Compal Secret Data		
Issued Date	2008/09/15	Deciphered Date	2009/09/15

THIS SHEET OF ENGINEERING DRAWING IS THE PROPRIETARY PROPERTY OF COMPAL ELECTRONICS, INC. AND CONTAINS CONFIDENTIAL AND TRADE SECRET INFORMATION. THIS SHEET MAY NOT BE TRANSFERED FROM THE CUSTODY OF THE COMPETENT DIVISION OF R&D DEPARTMENT EXCEPT AS AUTHORIZED BY COMPAL ELECTRONICS, INC. NEITHER THIS SHEET NOR THE INFORMATION IT CONTAINS MAY BE USED BY OR DISCLOSED TO ANY THIRD PARTY WITHOUT PRIOR WRITTEN CONSENT OF COMPAL ELECTRONICS, INC.

Compal Electronics, Inc.

Title: **1.5VP/1.05VSP**

Size | Document Number: *LA-4891* | Rev: 0.1

Date: Tuesday, July 28, 2009 | Sheet 42 of 48

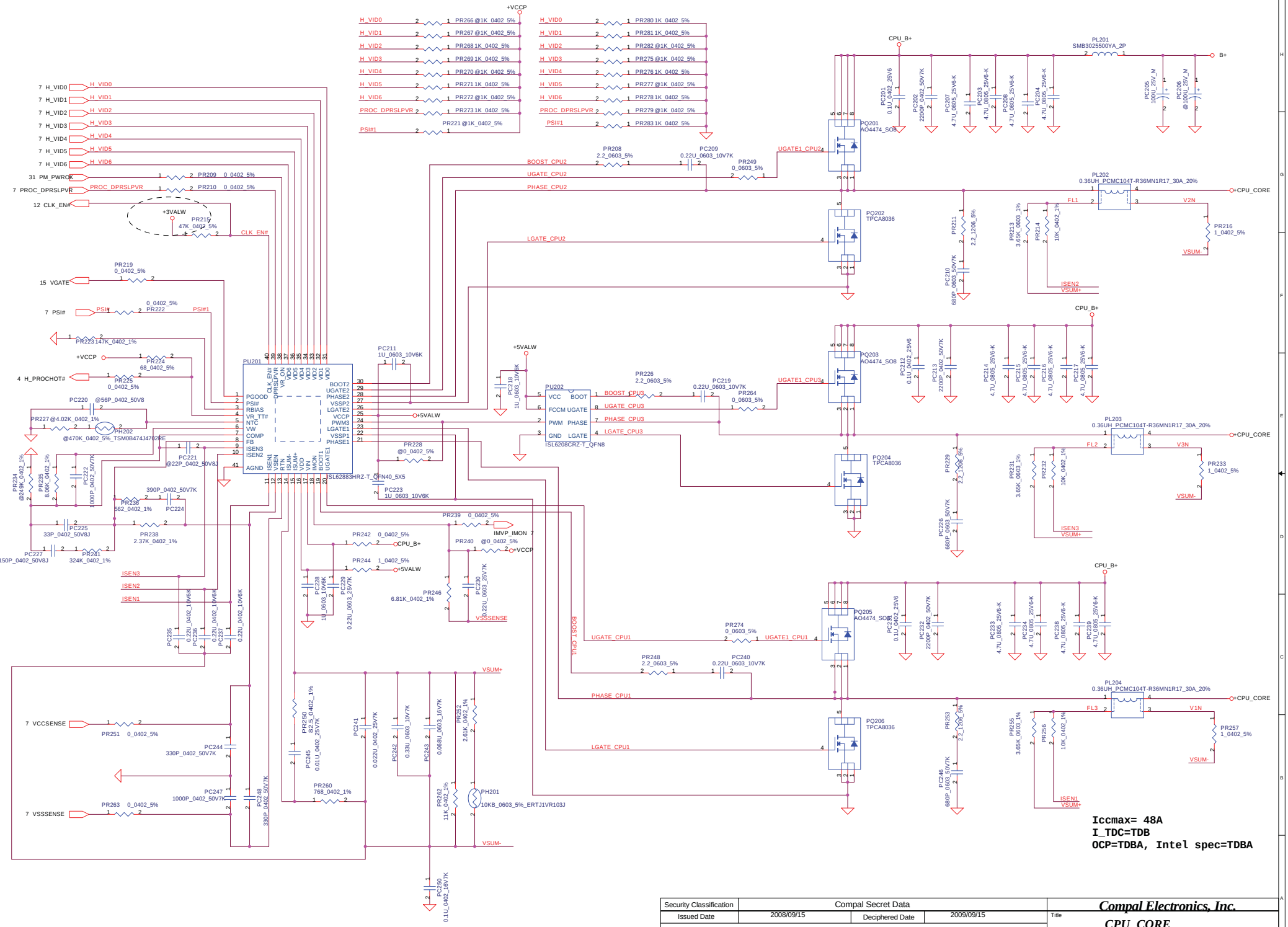

Security Classification	Compal Secret Data		
Issued Date	2008/09/15	Deciphered Date	2009/09/15

THIS SHEET OF ENGINEERING DRAWING IS THE PROPRIETARY PROPERTY OF COMPAL ELECTRONICS, INC. AND CONTAINS CONFIDENTIAL AND TRADE SECRET INFORMATION. THIS SHEET MAY NOT BE TRANSFERED FROM THE CUSTODY OF THE COMPETENT DIVISION OF R&D DEPARTMENT EXCEPT AS AUTHORIZED BY COMPAL ELECTRONICS, INC. NEITHER THIS SHEET NOR THE INFORMATION IT CONTAINS MAY BE USED BY OR DISCLOSED TO ANY THIRD PARTY WITHOUT PRIOR WRITTEN CONSENT OF COMPAL ELECTRONICS, INC.

Compal Electronics, Inc.

Title: **CPU_CORE**

Size	Document Number	Rev
	LA-4891	0.1

Date: Tuesday, July 28, 2009 | Sheet 43 of 48

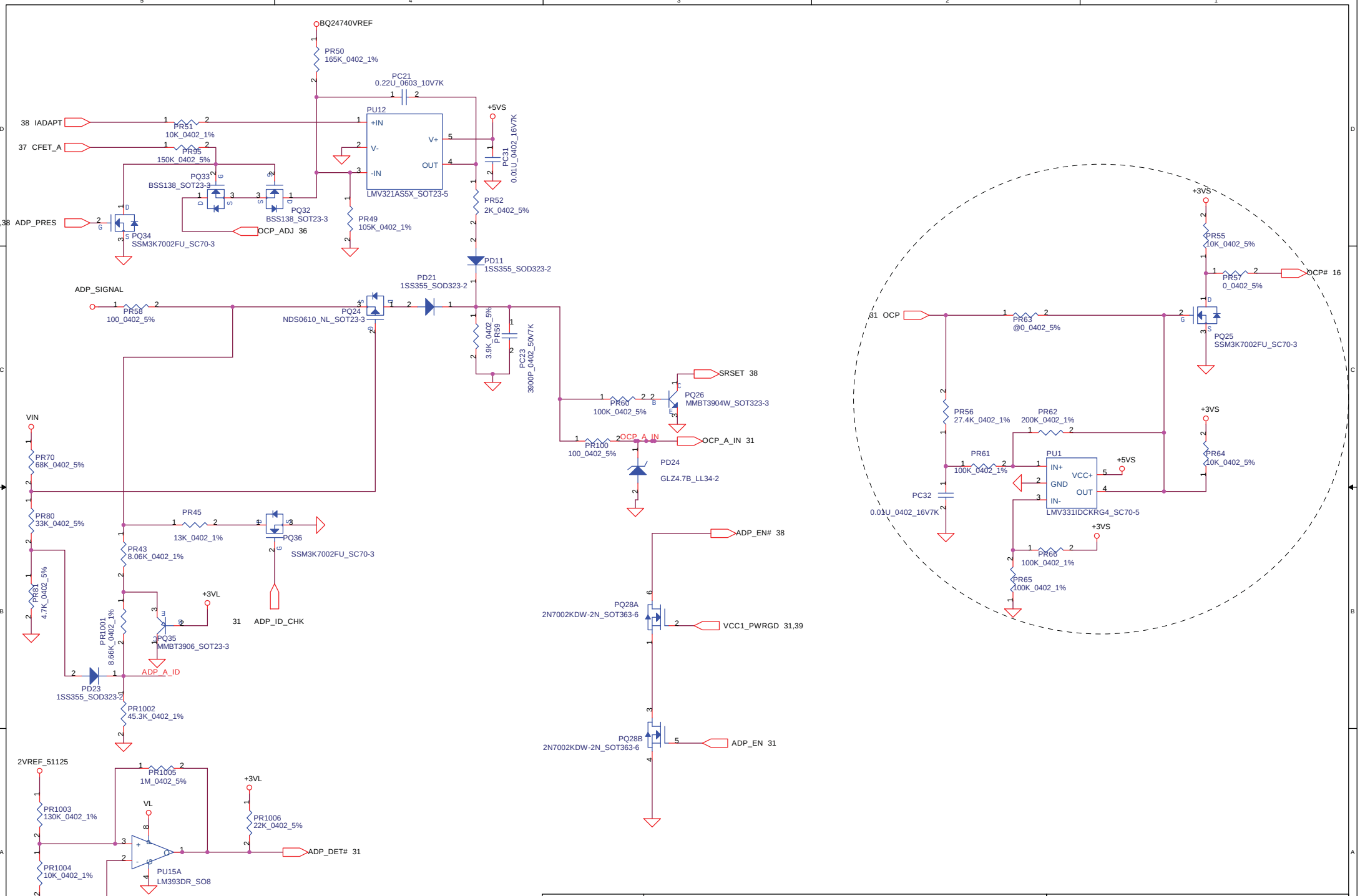

Security Classification	Compal Secret Data		
Issued Date	2008/09/15	Deciphered Date	2009/09/15

THIS SHEET OF ENGINEERING DRAWING IS THE PROPRIETARY PROPERTY OF COMPAL ELECTRONICS, INC. AND CONTAINS CONFIDENTIAL AND TRADE SECRET INFORMATION. THIS SHEET MAY NOT BE TRANSFERED FROM THE CUSTODY OF THE COMPETENT DIVISION OF R&D DEPARTMENT EXCEPT AS AUTHORIZED BY COMPAL ELECTRONICS, INC. NEITHER THIS SHEET NOR THE INFORMATION IT CONTAINS MAY BE USED BY OR DISCLOSED TO ANY THIRD PARTY WITHOUT PRIOR WRITTEN CONSENT OF COMPAL ELECTRONICS, INC.

Compal Electronics, Inc.

Title: **ADP_OCP**

Size: Custom | Document Number: *LA-4891* | Rev

Date: Tuesday, July 28, 2009 | Sheet 44 of 48

Item	Reason for change	PG#	Modify List	Date	Phase
1					
2					
3					
4					
5					
6					
7					

Security Classification: Compal Secret Data
Issued Date: 2008/09/15 Deciphered Date: 2009/09/15
THIS SHEET OF ENGINEERING DRAWING IS THE PROPRIETARY PROPERTY OF COMPAL ELECTRONICS, INC. AND CONTAINS CONFIDENTIAL AND TRADE SECRET INFORMATION. THIS SHEET MAY NOT BE TRANSFERRED FROM THE CUSTODY OF THE COMPETENT DIVISION OF R&D DEPARTMENT EXCEPT AS AUTHORIZED BY COMPAL ELECTRONICS, INC. NEITHER THIS SHEET NOR THE INFORMATION IT CONTAINS MAY BE USED BY OR DISCLOSED TO ANY THIRD PARTY WITHOUT PRIOR WRITTEN CONSENT OF COMPAL ELECTRONICS, INC.

Compal Electronics, Inc.
Title: Changed-List History
Size: Document Number: LA-4961P Rev: 0.1
Date: Tuesday, July 28, 2009 Sheet 45 of 48

Version Change List (P. I. R. List) for HW Circuit

Item	Page#	Title	Date	Request Owner	Issue Description	Solution Description	Rev.
1	21	MXM PEG Bus	01/19	Compal	Can't detect GPU of MXM board	Need reverse TX & RX bus of PEG.	0.2
2	21	MXM LVDS Bus	01/19	Compal	No display of LVDS panel	Need reverse LVDS low&high bit BUS.	0.2
3	13	RTC	01/19	Compal	RTC no function	Reverse signals of RTC connector.	0.2
4	29	JVGAFFC1	01/20	Compal	JVGAFFC1 pin23&24 was dummy, USB cacn't work	Connect JVGAFFC1 pin23&24 to SLP_S4.	0.2
5	20	DISP_OFF#	02/02	Compal	Use wrong power rail for this signal.	Currently panel spec is +3VS.	0.2
6	20	Left USB port	02/02	Compal	It's wrong port for debug	Change connection from port0 to port1 for debug.	0.2
7	21	PWR_LEVEL	02/04	Compal	Need isolation circit per HP request.	Add Q69, Q70, R397, R388, R118.	0.2
8	4	CPU FAN CONN	02/06	Compal	No GND pin of FAN connector.	Change Connector to 4 pin with GND pin.	0.2
9	4,13,24	SM BUS	02/06	HP	HP request to remove SM bus to XDP, JTAG & WLAN.	Leave TP and remove signals.	0.2
10	22	Intel LAN	02/06	HP	Intel change design to remove some caps.	Remove these caps as Intel CRB design.	0.2
11	11	DDR M2 support	02/08	Compal	Data & CLK signals are reverse of U36.	Reverse CLK & DATA.	0.2
12	30	LED CTL circuit	02/06	HP	HP request to update LED control circuit.	No install R734 & R735.	0.2
13	15	Duplicate	02/06	HP	Remove R247 because of R541existing.	Remove R247.	0.2
14	13	PCH_JTAG_RST#	02/06	HP	Change R720 to NO INSTALL.	No install R720.	0.2
15	13	GPIO	02/06	HP	Change GPIO43_R to USB_OC#4 & reserve 33 ohm serial.	Add R134 but no install.	0.2
16	13	LED control	02/06	HP	Remove GND & change connection of R176.	Change R176 to 1K with install it.	0.2
17	14	CLKREQ_EXP#	02/06	HP	Change R687 PU for CLKREQ_EXP# to INSTALL.	Install R687.	0.2
18	17	PCH Power Rail	02/06	HP	Some power rail of PCH are no use.	Remove these power and add TP.	0.2
19	32	Card Reader	02/06	HP	It will need find tune value of R731 & C661.	Change R731 to 100K & C661 to 1uF X5R as Cartier first.	0.2
20	9	Debug port	02/10	HP	HP request to add debug port for iAMT.	Add JiAMT1.	0.2
21	16	WWAN CONN	02/10	HP	WOW# to WWAN connector is no longer supported.	Remove R117 and signal.	0.2
22	13	SATA port	02/10	HP	Change SATA assignments to support PM.	Port 4 --> 5, Port2 --> 4, Port3 -->2.	0.2
23	31	KBC1091	02/10	HP	Remove ADP_DET# on U23 GPIO9.	Add R320 PD on GPIO9.	0.2
24	24	WLAN	02/10	HP	Remove R441 and connection to JWLAN1.5	Remove R441.	0.2
25	24	USB port6	02/10	HP	Remove USB signals to JWLAN1.36 and 38.	Remove them.	0.2
26	20	WLAN	02/10	HP	Add 680P on DISP_OFF# close JLCD1 and change C359.	Change C359 to 0.1uF and add C439.	0.2
27	22	Intel 82578	02/10	HP	Can remove Q17, R405 & R124 if no leakage.	Reserve Q17, R405 and R124 in DB2.	0.2
28	4, 16	Intel Change	02/10	HP	414044 DG update 1.11	Change R31/R32 to 1.5K/750ohm and R297 to 100K.	0.2
29	31	System ID control	02/17	HP	Common Design with other project.	Del D49, R149 and Q154 and Add U44.	0.2
30	20	Webcam	02/17	HP	WEBCAM_OFF is active high, so need change design.	Add R287 to turn on Gate.	0.2
31	15	PWR_GD	02/17	HP	HP request to change design.	Add R399 and install R237.	0.2
32	15	NAND Flash	02/17	HP	HP request to change design.	Add NAND_DETECT# form U4.Y7 to JNAND1.17.	0.2
33	4	XDP PU	02/17	HP	HP request to change design.	Del R37, R38, R39.	0.2
34	22	LAN Power	02/17	HP	Remove power switch from 3V to 1V and related parts.	Remove C382, C383, C384, C385, C694, R401, R366, Q21 and R402.	0.2
35	29	Docking	02/17	HP	HP agree to remove caps for DP from MB to DOCKING.	Remove C496 ~ C511 from MB.	0.2
36	33	Super I/O	02/17	Compal	Common design change to SMSC.		

Security Classification	Compal Secret Data		
Issued Date	2006/02/28	Deciphered Date	2007/02/28

THIS SHEET OF ENGINEERING DRAWING IS THE PROPRIETARY PROPERTY OF COMPAL ELECTRONICS, INC. AND CONTAINS CONFIDENTIAL AND TRADE SECRET INFORMATION. THIS SHEET MAY NOT BE TRANSFERED FROM THE CUSTODY OF THE COMPETENT DIVISION OF R&D DEPARTMENT EXCEPT AS AUTHORIZED BY COMPAL ELECTRONICS, INC. NEITHER THIS SHEET NOR THE INFORMATION IT CONTAINS MAY BE USED BY OR DISCLOSED TO ANY THIRD PARTY WITHOUT PRIOR WRITTEN CONSENT OF COMPAL ELECTRONICS, INC.

Compal Electronics, Inc.

Title: HW Changed-List History-(0.1 to 0.2)

Size | Document Number: LA-4951P | Rev 0.4

Date: Tuesday, July 28, 2009 | Sheet 46 of 48

Version Change List (P. I. R. List) for HW Circuit

Item	Page#	Title	Date	Request Owner	Issue Description	Solution Description	Rev.
1	25	ESD DIODE	04/23	Compal	Wrong connection of D53 & D54, system can't boot.	Swap +5VS & GND of D53 & D54 pin 2 & 5.	0.3
2	29	SATA Port 5	04/23	Compal	It have wrong connection of JDOCK1 pin108 & pin109.	Swap SATA_PTX_C_DRX_P5/N5 of connector side.	0.3
3	28	SPI_CS0#	04/23	HP	HP request to add pull up resistor close to SPI ROM.	Reserve R6 close to U19.	0.3
4	14	SM BUS	04/23	HP	Intel request to change PU to 2.2K.	Change R199, R200 from 4.7K to 2.2K	0.3
5	23	LAN Transfermer	04/23	HP	Intel request to add 1uF cap between TRM caps to GND.	Add C264 to GND.	0.3
6	13	JTAG Port	04/24	HP	HP review need swap JTAG1 pin4 & pin6.	Swap XDP_FN16 & XDP_FN17 at JTAG1 side.	0.3
7	17	PCH +1.05VS	04/25	HP	HP review will no need connect resistor between them.	Remove R310.	0.3
8	14	PCH 25MHz Crystall	04/25	HP	No need 25MHz for PCH as common design.	No install R229, C281, C282, Y4 but add R52.	0.3
9	31	KBC1098 VCC0	04/25	HP	The VCC0 will never connect to GND.	Remove R587 from schematic.	0.3
10	16	LAN_DIS#	04/25	HP	GPIO12 of PCH have internal PU.	No install R279 and reserve R53 PD.	0.3
11	21	DPA AUX	04/25	HP	Need 0.1uF cap for Q20, Q67 gate pin.	Add C265.	0.3
12	30	WWAN_DET#	04/25	HP	Design Change PCH GPIO22 to WWAN_DET#.	Change GPIO of PCH to WWAN_DET#.	0.3
13	16	Webcam control	04/25	HP	Chnage the control pin from GPIO47 to GPIO22 of PCH.	Modify WEBCAM_OFF to WEBCAM_ON, add R66 PU for GPIO47.	0.3
14	20	Webcam control	04/25	HP	Chnage the control pin from GPIO47 to GPIO22 of PCH.	Del R350.	0.3
15	13	DOCK LED	04/25	HP	Need inverter for docking power LED signal.	Add Q71 & R67.	0.3
16	33	SER_SHD	04/25	HP	HP request to remove SER_SHD from SIO to docking.	Disconnect SER_SHD at docking side, add R7 PU to +3VS.	0.3
17	9, 10	DDR3 M1 & M3	04/30	HP	Need implement M1, M3 but reserve M2 for SI1.	Remove R91, R682~R684 and add divider for V_DDR_CPU_REF0/1.	0.3
18	17	PCH Power Rail		HP	Some power rail of PCH are no use.	Remove these power and add TP.	0.3
19	32	Card Reader		HP	It will need find tune value of R731 & C661.	Change R731 to 100K & C661 to 1uF X5R as Cartier first.	0.3
20	9	Debug port		HP	HP request to add debug port for iAMT.	Add JiAMT1.	0.3
21	16	WWAN CONN		HP	WOW# to WWAN connector is no longer supported.	Remove R117 and signal.	0.3
22	13	SATA port		HP	Change SATA assignments to support PM.	Port 4 --> 5, Port2 --> 4, Port3 -->2.	0.3
23	31	KBC1091		HP	Remove ADP_DET# on U23 GPIO9.	Add R320 PD on GPIO9.	0.3
24	24	WLAN		HP	Remove R441 and connection to JWLAN1.5	Remove R441.	0.3
25	24	USB port6		HP	Remove USB signals to JWLAN1.36 and 38.	Remove them.	0.3
26	20	WLAN		HP	Add 680P on DISP_OFF# close JLCD1 and change C359.	Change C359 to 0.1uF and add C439.	0.3
27	22	Intel 82578		HP	Can remove Q17, R405 & R124 if no leakage.	Reserve Q17, R405 and R124 in DB2.	0.3
28	4, 16	Intel Change		HP	414044 DG update 1.11	Change R31/R32 to 1.5K/750ohm and R297 to 100K.	0.3
29	31	System ID control		HP	Common Design with other project.	Del D49, R149 and Q154 and Add U44.	0.3
30	20	Webcam		HP	WEBCAM_OFF is active high, so need change design.	Add R287 to turn on Gate.	0.3
31	15	PWR_GD		HP	HP request to change design.	Add R399 and install R237.	0.3
32	15	NAND Flash		HP	HP request to change design.	Add NAND_DETECT# form U4.Y7 to JNAND1.17.	0.3
33	4	XDP PU		HP	HP request to change design.	Del R37, R38, R39.	0.3
34	22	LAN Power		HP	Remove power switch from 3V to 1V and related parts.	Remove C382, C383, C384, C385, C694, R401, R366, Q21 and R402.	
35	29	Docking		HP	HP agree to remove caps for DP from MB to DOCKING.	Remove C496 ~ C511 from MB.	
36	33	Super I/O		Compal	Common design change to SMSC.		

Security Classification	Compal Secret Data		
Issued Date	2006/02/28	Deciphered Date	2007/02/28

THIS SHEET OF ENGINEERING DRAWING IS THE PROPRIETARY PROPERTY OF COMPAL ELECTRONICS, INC. AND CONTAINS CONFIDENTIAL AND TRADE SECRET INFORMATION. THIS SHEET MAY NOT BE TRANSFERED FROM THE CUSTODY OF THE COMPETENT DIVISION OF R&D DEPARTMENT EXCEPT AS AUTHORIZED BY COMPAL ELECTRONICS, INC. NEITHER THIS SHEET NOR THE INFORMATION IT CONTAINS MAY BE USED BY OR DISCLOSED TO ANY THIRD PARTY WITHOUT PRIOR WRITTEN CONSENT OF COMPAL ELECTRONICS, INC.

Compal Electronics, Inc.

Title: HW Changed-List History-(0.1 to 0.2)

Size: | Document Number: LA-4951P | Rev: 0.4

Date: Tuesday, July 28, 2009 | Sheet 47 of 48

Version Change List (P. I. R. List) for HW Circuit

Item	Page#	Title	Date	Request Owner	Issue Description	Solution Description	Rev.
1	4	FAN CTRL Circuit	07/2	HP	FAN always 100% turn after power on	Del D29 & NI R133 to prevent this issue.	0.4
2	29	SATA Port 5	04/23	Compal	It have wrong connection of JDOCK1 pin108 & pin109.	Swap SATA_PTX_C_DRX_P5/N5 of connector side.	0.3
3	28	SPI_CS0#	04/23	HP	HP request to add pull up resistor close to SPI ROM.	Reserve R6 close to U19.	0.3
4	14	SM BUS	04/23	HP	Intel request to change PU to 2.2K.	Change R199, R200 from 4.7K to 2.2K	0.3
5	23	LAN Transfermer	04/23	HP	Intel request to add 1uF cap between TRM caps to GND.	Add C264 to GND.	0.3
6	13	JTAG Port	04/24	HP	HP review need swap JTAG1 pin4 & pin6.	Swap XDP_FN16 & XDP_FN17 at JTAG1 side.	0.3
7	17	PCH +1.05VS	04/25	HP	HP review will no need connect resistor between them.	Remove R310.	0.3
8	14	PCH 25MHz Crystall	04/25	HP	No need 25MHz for PCH as common design.	No install R229, C281, C282, Y4 but add R52.	0.3
9	31	KBC1098 VCC0	04/25	HP	The VCC0 will never connect to GND.	Remove R587 from schematic.	0.3
10	16	LAN_DIS#	04/25	HP	GPIO12 of PCH have internal PU.	No install R279 and reserve R53 PD.	0.3
11	21	DPA AUX	04/25	HP	Need 0.1uF cap for Q20, Q67 gate pin.	Add C265.	0.3
12	30	WWAN_DET#	04/25	HP	Design Change PCH GPIO22 to WWAN_DET#.	Change GPIO of PCH to WWAN_DET#.	0.3
13	16	Webcam control	04/25	HP	Chnage the control pin from GPIO47 to GPIO22 of PCH.	Modify WEBCAM_OFF to WEBCAM_ON, add R66 PU for GPIO47.	0.3
14	20	Webcam control	04/25	HP	Chnage the control pin from GPIO47 to GPIO22 of PCH.	Del R350.	0.3
15	13	DOCK LED	04/25	HP	Need inverter for docking power LED signal.	Add Q71 & R67.	0.3
16	33	SER_SHD	04/25	HP	HP request to remove SER_SHD from SIO to docking.	Disconnect SER_SHD at docking side, add R7 PU to +3VS.	0.3
17	9, 10	DDR3 M1 & M3	04/30	HP	Need implement M1, M3 but reserve M2 for SI1.	Remove R91, R682~R684 and add divider for V_DDR_CPU_REF0/1.	0.3
18	17	PCH Power Rail		HP	Some power rail of PCH are no use.	Remove these power and add TP.	0.3
19	32	Card Reader		HP	It will need find tune value of R731 & C661.	Change R731 to 100K & C661 to 1uF X5R as Cartier first.	0.3
20	9	Debug port		HP	HP request to add debug port for iAMT.	Add JiAMT1.	0.3
21	16	WWAN CONN		HP	WOW# to WWAN connector is no longer supported.	Remove R117 and signal.	0.3
22	13	SATA port		HP	Change SATA assignments to support PM.	Port 4 --> 5, Port2 --> 4, Port3 -->2.	0.3
23	31	KBC1091		HP	Remove ADP_DET# on U23 GPIO9.	Add R320 PD on GPIO9.	0.3
24	24	WLAN		HP	Remove R441 and connection to JWLAN1.5	Remove R441.	0.3
25	24	USB port6		HP	Remove USB signals to JWLAN1.36 and 38.	Remove them.	0.3
26	20	WLAN		HP	Add 680P on DISP_OFF# close JLCD1 and change C359.	Change C359 to 0.1uF and add C439.	0.3
27	22	Intel 82578		HP	Can remove Q17, R405 & R124 if no leakage.	Reserve Q17, R405 and R124 in DB2.	0.3
28	4, 16	Intel Change		HP	414044 DG update 1.11	Change R31/R32 to 1.5K/750ohm and R297 to 100K.	0.3
29	31	System ID control		HP	Common Design with other project.	Del D49, R149 and Q154 and Add U44.	0.3
30	20	Webcam		HP	WEBCAM_OFF is active high, so need change design.	Add R287 to turn on Gate.	0.3
31	15	PWR_GD		HP	HP request to change design.	Add R399 and install R237.	0.3
32	15	NAND Flash		HP	HP request to change design.	Add NAND_DETECT# form U4.Y7 to JNAND1.17.	0.3
33	4	XDP PU		HP	HP request to change design.	Del R37, R38, R39.	0.3
34	22	LAN Power		HP	Remove power switch from 3V to 1V and related parts.	Remove C382, C383, C384, C385, C694, R401, R366, Q21 and R402.	
35	29	Docking		HP	HP agree to remove caps for DP from MB to DOCKING.	Remove C496 ~ C511 from MB.	
36	33	Super I/O		Compal	Common design change to SMSC.		

Security Classification	Compal Secret Data		
Issued Date	2006/02/28	Deciphered Date	2007/02/28

THIS SHEET OF ENGINEERING DRAWING IS THE PROPRIETARY PROPERTY OF COMPAL ELECTRONICS, INC. AND CONTAINS CONFIDENTIAL AND TRADE SECRET INFORMATION. THIS SHEET MAY NOT BE TRANSFERED FROM THE CUSTODY OF THE COMPETENT DIVISION OF R&D DEPARTMENT EXCEPT AS AUTHORIZED BY COMPAL ELECTRONICS, INC. NEITHER THIS SHEET NOR THE INFORMATION IT CONTAINS MAY BE USED BY OR DISCLOSED TO ANY THIRD PARTY WITHOUT PRIOR WRITTEN CONSENT OF COMPAL ELECTRONICS, INC.

Compal Electronics, Inc.

Title: HW Changed-List History-(0.3 to 0.4)

Size | Document Number: LA-4951P | Rev 0.4

Date: Tuesday, July 28, 2009 | Sheet 48 of 48